Standard Bidding Document

Supply, Installation, Testing and Commissioning of a New Passenger Elevator at the Club Masjid, Islamabad Club (Works)

National

Single Stage-Two Envelope

October 05, 2026

Islamabad Club (Islamabad Club),Procurement Officer
Islamabad Club Main Murree Road, Kashmir Road, Islamabad Capital Territory
Phone: +92-314-531-7545, Email: arslan.javed@islamabadclub.org.pk

Table of Contents

REQUEST FOR BIDS 1

Instructions to Bidders 3

Bid Data Sheet 31

Bids Data Sheet (BDS) 32

Eligibility Criteria 36

Evaluation Criteria 38

Jobs/Lots 39

Related Services : 41

Work Specifications and Market Rates 42

Scope of Work 43

Price Schedule 44

General Conditions of Contract 46

Special Conditions of Contract 56

Bid Securing Declaration 61

Contract Form 63

Integrity Pact 66

Performance Guarantee Form 68

Annexure 71

TECHNICAL DATA SHEET 72

PAYMENT STAGES 72

DRAWINGS 72

BILL OF QUANTITIES 72

ANNEX C UNDERTAKING 72

Procurement Forms 73

Additional Forms and Documents 76

REQUEST FOR BIDS

PROCUREMENT OF CIVIL WORKS

1. The **Islamabad Club (Islamabad Club)** has reserved Funds for the procurement planned for FY **2026-27**. The **Islamabad Club (Islamabad Club)** intends to apply part of the proceeds of this Fund to cover eligible payments under the contract for the "**Supply, Installation, Testing and Commissioning of a New Passenger Elevator at the Club Masjid, Islamabad Club**" with the reference of "**P145845**".

2. The **Islamabad Club (Islamabad Club)** invites sealed Bids from eligible Bidders for procurement of Works **(Supply, Installation, Testing and Commissioning of a New Passenger Elevator at the Club Masjid, Islamabad Club)** described in the bidding documents on **EPADS v2.0**.

3. **Single Stage-Two Envelope** will be used by adopting **Quality and Cost Based Selection (QCBS)** Technique for the subject procurement, in line with the Public Procurement Rules, 2004 and any Regulations, Regulatory Guides, Procurement Guidelines or Instructions issued by the Authority from time to time.

4. All Bids must be accompanied by a Bid Security amount described in Bid Security Section in Bidding Document in the form of **Pay Order, Banker's Cheque, Call at Deposit, Bank Guarantee**. Or all bids must be accompanied by bid securing declaration in the format specified in the Bidding documents

5. E-Bidding documents, containing detailed terms & conditions, specifications and requirements etc. are available on **e-Pak Acquisition and Disposal System (EPADS)** at **https://epads.gov.pk/opportunities/federal/procurements/145845** for all the interested bidders registered on **EPADS v2.0**. Bidders are required to get themselves registered on **EPADS v2.0** to participate in Bidding process.

6. The e-bids, prepared in accordance with the instructions in the e-Bidding documents, must be submitted through **EPADS v2.0** on or before **Monday, October 26, 2026 11:00 AM**. E-bids will be opened by using **EPADS v2.0** on

the same day at **Monday, October 26, 2026 11:30 AM**. Manual submission of Bids shall not be entertained. Those vendor who have not yet registered on the new version of **EPADS v2.0**, may register themselves on **https://vendors.epads.gov.pk/**. A tutorial to explain the registeration process is available at **https://www.youtube.com/watch?v=MNW6T38v7tc.**

In terms of Rules 48 of Public Procurement Rules, 2004 Grievance Redressal Committee (GRC) is notified for the subject procurement and notification copy is available on the procuring agency's website and on Authority's website at (**www.ppra.org.pk**).

Islamabad Club (Islamabad Club), Procurement Officer
Islamabad Club Main Murree Road, Kashmir Road, Islamabad Capital Territory
+92-314-531-7545
arslan.javed@islamabadclub.org.pk

Instructions to Bidders

A. INTRODUCTION

1. **Scope of Bid**

1.1. The Procuring agency/Employer (PA), as indicated in the Bid Data Sheet (BDS) invites Bids for the execution of Works as specified in the BDS and Section V- Works Requirements. The name, identification, and number of lots (contracts) of this National/ International Competitive Bidding process are specified in the BDS.

2. **Source of Funds**

2.1. Source of funds as referred in Clause 2 of Bid Data Sheet.

3. **Eligible Bidders**

3.1. A bidder may be natural person, company or firm or public or semi-public agency of Pakistan or any foreign country, or any combination of them with a formal existing agreement (on Judicial Papers) in the form of a joint venture or consortium. In the case of a joint venture or consortium, all members shall be jointly and severally liable for the execution of the Contract in accordance with the terms and conditions of the Contract. The joint venture or consortium shall nominate a Lead Member as nominated in the BDS, who shall have the authority to conduct all business for and on behalf of any and all the members of the joint venture or consortium during the Bidding process, and in case of award of contract, during the execution of contract. Verifiable copy of the agreement that forms a joint venture, consortium or association shall be required to be submitted as part of the Bid.

Any bid submitted by the joint venture, consortium or association shall indicate the part of proposed contract to be performed by each party and each party shall be evaluated (or post qualified if required) with respect to its contribution only, and the responsibilities of each party shall not be substantially altered without prior written approval of the Procuring Agency and in line with any instructions issued by the Authority.

(The limit on the number of members of JV or Consortium may be prescribed

in BDS, in accordance with the guidelines issued by the PPRA).

3.2. The invitation for bids is open to all prospective bidders subject to any provisions of incorporation or licensing by the respective national/ international incorporating agency or statutory body established for that particular trade or business. Procuring agencies shall specify the registration/licensing requirements for the foreign bidder keeping in view the requirement of that business.

3.3. A Bidder shall not have a conflict of interest. All Bidders found to have a conflict of interest shall be disqualified. A Bidders may be considered to have a conflict of interest with one or more parties in this Bidding process, if they:

3.3.1. are associated or have been associated in the past, directly or indirectly with a firm or any of its affiliates which have been engaged by the Procuring agency/Employer to provide consulting services for the preparation of design or technical specifications of the works that are the subject of the bid; or

3.3.2. have controlling shareholders in common; or

3.3.3. receive or have received any direct or indirect subsidy from any of them; or

3.3.4. have the same legal representative for purposes of this Bid; or

3.3.5. have a relationship with each other, directly or through common third parties, that puts them in a position to have access to information about or influence on the bid of another bidder, or influence the decisions of the Procuring agency/Employer regarding this Bidding process; or

3.3.6. Submit more than one bid in this bidding process.

3.4. A Bidder may be ineligible if –

3.4.1. he is declared bankrupt or, in the case of company or firm, insolvent;

3.4.2. payments in favor of the bidder is suspended in accordance with the judgment of a court of law other than a judgment declaring bankruptcy and resulting (in accordance with the national laws) in the total or partial loss of the right to administer and dispose of its property;

3.4.3. the bidder is convicted, by a final judgment of a Court of Law or relevant Professional Statuary Body, of any offence involving professional conduct;

3.4.4. The bidder is debarred/ blacklisted by a national level Procuring agency/Employer and hence debarred due to involvement in corrupt and fraudulent practices, or performance failure or due to breach of bid securing declaration.

3.5. As and when required, bidders shall provide to the Procuring agency/Employer evidence of their eligibility, proof of compliance with the necessary legal requirements to carry out the contract effectively.

3.6. Bidders shall submit proposal relating to the nature, conditions and modalities of sub-contracting wherever the sub-contracting of any elements of the contract is envisaged.

4. **Eligible Material and Equipment**

4.1. All the material and equipment to be mobilized under the contract shall have their origin in eligible source countries, and all expenditures made under the contract will be limited to such materials and equipment. For this purpose, ineligible countries are stated in the section-IV titled as “Eligible Countries”.

B. BIDDING DOCUMENTS

5. **Contents of Bidding Documents**

5.1. The scope of Works, bidding procedures, and terms and conditions of the contract are prescribed in the bidding documents. In addition to the Invitation for Bids, the bidding documents which should be read in

conjunction with any addenda issued in accordance with ITB 7.1 include:

Section I -Invitation for Bids

Section II Instructions to Bidders (ITBs)

Section III Bid Data Sheet (BDS)

Section IV Eligible Countries

Section V Evaluation and Qualification Criteria

Section VI Works Requirements Technical Specifications & Schedule of Requirements

Section VII Standard Bidding Forms

Section VIII General Conditions of Contract (GCC)

Section IX Particular Conditions of Contract (PCC)

Section X Contract Forms

5.2. The bidder is expected to examine all instructions, forms, specifications, terms and conditions prescribed in the bidding documents. Failure to furnish all the information required in the bidding documents will be at the bidder's risk and may result in the rejection of his bid.

6. **Clarification of Bidding Document, Pre-bid Meeting**

6.1. A prospective bidder requiring any clarification of the bidding document may notify the Procuring agency/Employer through EPADS.

6.2. The Procuring agency/Employer shall respond to the request for clarification in accordance with Rule 31 of the Public Procurement Rules 2004.

6.3. Should the Procuring Agency deem it necessary to amend the BIDDING document as a result of a clarification, it shall do so following the procedure under ITB 7.

6.4. If indicated in the BDS, the bidder's designated representative is invited at the bidder's cost to attend a pre-bid meeting at the place, date and time mentioned in the BDS. During this pre-bid meeting, prospective bidders may request clarification of the schedule of requirement, the evaluation criteria or any other aspects of the bidding documents.

6.5. Minutes of the pre-bid meeting, if applicable, including the text of the questions asked by bidders, including those during the meeting (without identifying the source) and the responses given, together with any responses prepared after the meeting will be uploaded on EPADS. Any modification to the bidding documents that may become necessary as a result of the pre-bid meeting shall be made by the Procuring agency/Employer exclusively through the use of an Addendum pursuant to ITB 7. Non-attendance at the pre-bid meeting will not be a cause for disqualification of a bidder.

6.6. The bidder is advised to visit and examine the Site of Works and its surroundings and obtain for itself on its own responsibility all information that may be necessary for preparing the bid and entering into a contract for construction of the Works. The costs of visiting the Site shall be at the bidder's own expense.

6.7. The bidder and any of its authorized personnel will be granted permission by the Procuring agency/Employer to enter upon its premises and lands for the purpose of such visit, but only upon the express condition that the bidder and its personnel will release and indemnify the Procuring agency/Employer from and against all liability in respect thereof, and will be responsible for death or personal injury, loss of or damage to property, and any other loss, damage, costs, and expenses incurred as a result of the inspection.

7. **Amendment of Bidding Documents**

7.1. The procuring agency may issue notification of any change, addition, modification or deletion in accordance with Rule 23 of the Public Procurement Rules 2004 i.e. Bidding Documents.

7.2. To give prospective bidders reasonable time in which to take an addendum/corrigendum into account in preparing their bids, the Procuring agency/Employer may, at its discretion, extend the deadline for the submission of bids:

Provided that the Procuring agency/Employer shall extend the deadline for submission of bid in pursuance of Rule 27 of the Public Procurement Rules 2004, i.e. Extension of time for submission of bids, if such an addendum is

issued within last three (03) days of the bid submission deadline.

C. PREPARATION OF BIDS

8. **Language of Bid**

8.1. The bid prepared by the bidder, as well as all correspondence and documents relating to the bid exchanged by the bidder and the Procuring agency/Employer shall be written in the English language unless specified in the BDS. Supporting documents and printed literature furnished by the bidder may be in another language provided they are accompanied by an accurate translation of the relevant pages in the English language unless specified in the BDS, in which case, for purposes of interpretation of the bidder, the translation shall govern.

9. **Documents Constituting the Bids**

9.1. The Bids prepared by the Bidder shall constitute of all the documents required in the BDS.

10. **Documents Establishing Eligibility of Material, Equipment and Works, their Conformity to Bidding Documents**

10.1. The bid prepared by the bidder shall constitute the following components: -

10.1.1. Documentary evidence established in accordance with ITB 10 that the material and equipment to be utilized by the Bidder for the executions of works are eligible material and equipment and conform to the Bidding Documents;

10.1.2. Documentary evidence established in accordance with ITB 11 that the bidder has been authorized to carry out the Construction works;

10.1.3. Documentary evidence established in accordance with ITB 11 that the bidder is eligible and/or qualified for the subject bidding process;

10.1.4. Form of Bid and Bid Prices completed in accordance with ITB 12 and 13;

10.1.5. Completed schedules as required, including priced Bill of Quantities in accordance with ITB 13.

10.1.6. Technical Proposal completed in all aspects in accordance with ITB-15.

10.1.7. Bid security or Bid Securing Declaration furnished in accordance with ITB 17;

10.1.8. Any other document required in the BDS.

10.2. In addition to the requirements, bids submitted by a JV shall include a copy of the Joint Venture Agreement entered into by all members. Alternatively, a letter of intent to execute a Joint Venture Agreement in the event of a successful bid shall be signed by all members and submitted with the bid, together with a copy of the proposed Agreement.

10.3. The bidder shall furnish, as part of its bid, all those documents establishing the eligibility in conformity to the terms and conditions specified in the bidding documents for all material, equipment and works which the bidder proposes to execute.

10.4. The documentary evidence of conformity of the material, equipment and works to the Bidding Documents may be in the form of literature, drawings, and data, and shall consist of:

10.4.1. a detailed description of the work methodology, approach, schedule and resources to be mobilized at site;

10.4.2. an item-by-item commentary on the Procuring agency/Employer’s Technical Specifications demonstrating substantial responsiveness of the material, equipment and works to those specifications, or a statement of deviations and exceptions to the provisions of the Technical Specifications;

10.4.3. any other procurement specific documentation requirement as stated in the BDS.

10.5. The required documents and other accompanying documents must be in English. In case any other language than English is used the pertinent translation into English shall be attached to the original version.

11. **Documents Establishing Eligibility and Qualification of the Bidder**

11.1. The bidder shall furnish, as part of its bid, all those documents establishing the bidder's eligibility to participate in the bidding process and/or its qualification to perform the contract if its bid is accepted.

11.2. The documentary evidence of the bidder's eligibility to bid shall establish to the satisfaction of the Procuring agency/Employer that the bidder, at the time of submission of its bid, is from an eligible country as defined in Section-IV titled as "Eligible Countries".

11.3. The documentary evidence of the bidder's qualification to perform the contract if its bid is accepted shall establish to the satisfaction of Procuring agency/Employer that:

11.3.1. The bidder has the financial and technical capability necessary to perform the Contract, meets the qualification criteria specified in Section-V, Evaluation and Qualification Criteria and BDS.

11.3.2. In the case of a bidder not doing business within Pakistan, the bidder is or will be (if awarded the contract) represented by a local bidder (Joint Venture) in accordance with the PEC works bylaws, and in case of award of works such foreign firm is required to participate in the execution of works to carry out its obligations as prescribed in the Conditions of Contract and /or Technical Specifications.

11.3.3. That the bidder meets the qualification criteria listed in Section-V, Evaluation and Qualification Criteria and BDS.

12. **Forms of Bid**

12.1. The Bidder shall fill the Form of Bids furnished in the bidding documents. The Bids Form must be completed without any alterations to its format and no substitute shall be accepted.

13. **Bid Prices**

13.1. The bid prices quoted by the bidder in the Standard bid Forms, Bill of Quantities and in the Price Schedules shall conform to the requirements specified below or exclusively mentioned hereafter in the bidding documents.

13.2. The bidder shall fill in rates and prices for all items of the Works described in the Bill of Quantities. If a Price Schedule shows items listed but not priced, their prices shall be construed to be included in the prices of other items in the Bill of Quantities and will not be paid for separately by the Procuring agency/Employer.

13.3. Items not listed in the Price Schedule shall be assumed not to be included in the bid, and provided that the bid is still substantially responsive in their absence or due to their nominal nature, the corresponding average price of the respective item(s) of the remaining substantially responsive bidder(s) shall be construed to be the price of those missing item(s):
Provided that:

13.3.1. where there is only one (substantially) responsive bidder, or

13.3.2. where there is provision for alternate proposals and the respective items are not listed in the other bids,
The Procuring agency/Employer may fix the price of missing items in accordance with market survey, and the same shall be considered as final price.

13.4. The Bid price to be quoted in the Form of Bid in accordance with ITB 12 shall be the total price of the bid.

13.5. Unless otherwise specified in the BDS and the Contract, the rates and prices quoted by the bidder are subject to adjustment during the performance of the Contract in accordance with the provisions of the

Conditions of Contract.

13.6. If so specified in ITB 1.1, bids may be invited for individual lots (contracts) or for any combination of lots (packages).

13.7. Prices quoted by the Bidder shall be fixed during the bidder's performance of the contract and not subject to variation on any account. A bid submitted with an adjustable price will be treated as non-responsive and shall be rejected, pursuant to ITB 27, unless otherwise price adjustment is permissible under Conditions of the Contract.

13.8. All duties, taxes, and other levies payable by the Contractor under the Contract, or for any other cause, as of the date twenty-eight (28) days prior to the deadline for submission of bids, shall be included in the rates and prices and the total bid price submitted by the bidder.

14. **Currencies of Bid and Payment**

14.1. Prices shall be quoted in Pakistani Rupees unless otherwise specified in the BDS. Comparison of bids and tie of bid shall be treated in accordance with the Rule 30(2) of Public Procurement Rules, 2004.

15. **Documents Comprising the Technical Proposal**

15.1. The bidder shall furnish a Technical Proposal including a statement of work methods, equipment, personnel, schedule and any other information as stipulated in Section VII – Standard Bid Forms, in sufficient detail to demonstrate the adequacy of the bidder's proposal to meet the work requirements and the completion time.

16. **Bid Validity Period**

16.1. Bids shall remain valid for the period specified in the BDS after the bid submission deadline prescribed by the Procuring agency/Employer. A bid valid for a shorter period shall be rejected by the Procuring agency/Employer as non-responsive. The period of bid validity will be determined from the complementary bid securing instrument i.e. the expiry period of bid security or bid securing declaration as the case may be.

16.2. Under exceptional circumstances, prior to the expiration of the initial Bids/Bid validity period, the Procuring Agency may request the Bidders' consent to an extension of the period of validity of their Bids/Bid. Such request for extension of the period of bid validity shall be carried out in accordance with Rule 26 of the Public Procurement Rules, 2004.

17. **Bid Security or Bid Securing Declaration**

17.1. Pursuant to ITB 11.1 unless otherwise specified in the BDS, the bidder shall furnish as part of its bid, a Bid Security in accordance with Rule 25 of the Public Procurement Rules, 2004 in the amount and currency specified in the BDS or Bid Securing Declaration as specified in the BDS in the format provided in Section VII (Standard Bidding Forms).

In case Procuring agency/Employer is inviting bids in lots / packages, the bidder shall be required to submit his bid security against the respective lot/ package for which he is submitting his bid.

Until the development of functionality of auto verification of financial instrument in EPADS, the scanned copy of bid security or bid securing declaration, as the case may be, shall be uploaded on E-PADS whereas the original instrument to be submitted to the procuring agency before closing of bid submission deadline,

17.2. The Bid Security shall be denominated in the local currency or in another freely convertible currency, and it shall be in the form specified in the **BDS** which shall be in any of the following:

17.2.1. A bank guarantee, an irrevocable letter of credit issued by a Scheduled bank in the form provided in the Bidding Documents or another form acceptable to the Procuring agency/Employer and valid for twenty-eight (28) days beyond the end of the validity of the Bid. This shall also apply if the period for Bid Validity is extended. In either case, the form must include the complete name of the bidder;

17.2.2. A cashier's or certified cheque; or

17.2.3. Another security as indicated in the **BDS**.

17.3. The Bid Security or Bid Securing Declaration shall be in accordance with the Form of the Bid Security or Bid Securing Declaration included in Section VII (Standard Bidding Forms) or another form approved by the Procuring agency/Employer prior to the bid submission.

17.4. The Bid Security shall be payable promptly upon written demand by the Procuring agency/Employer in case any of the conditions listed in ITB 17.9 are invoked.

17.5. Any bid not accompanied by a Bid Security or Bid Securing Declaration in accordance with ITB 17.1 or 17.3 shall be rejected by the Procuring agency/Employer and shall be declared as non-responsive bid, pursuant to ITB 27.

17.6. Unsuccessful bidders' Bid Security will be discharged or returned as promptly as possible, however in no case later than thirty (30) days after the expiration of the period of Bid Validity prescribed by the Procuring agency/Employer pursuant to ITB 16. The Procuring agency/Employer shall make no claim to the amount of the Bid Security, and shall promptly return the Bid Security document, after whichever of the following that occurs earliest:

17.6.1. The expiry of the Bid Security;

17.6.2. The entry into force of a procurement contract and the provision of a performance security (or guarantee), for the performance of the contract if such a security (or guarantee), is required by the Biding documents;

17.6.3. The rejection by the Procuring agency/Employer of all Bids;

17.6.4. The withdrawal of the bid prior to the deadline for the submission of bids, unless the biding documents stipulate that no such withdrawal is permitted.

17.7. The successful bidder's Bid Security will be discharged upon the bidder signing the contract pursuant to ITB 40, or furnishing the performance security (or guarantee), pursuant to ITB 41.

17.8. The Bid Security may be forfeited or the Bid Securing Declaration executed:

17.8.1. if a Bidder:

17.8.1.1. Withdraws its Bid during the period of Bid Validity as specified by the Procuring agency/Employer, and referred by the bidder on the Form of Bid except as provided for in ITB 16.2; or

17.8.2. In the case of a successful bidder, if the bidder fails:

17.8.2.1. to sign the contract in accordance with ITB 40; or

17.8.2.2. to furnish performance security (or guarantee) in accordance with ITB 41.

17.9. In case of Bid Security issued by the foreign bank is allowed by the Procuring agency/Employer, the same should be counter guaranteed by a corresponding bank in Pakistan. Furthermore, in case of joint venture, it should be in the name of Joint venture to ensure joint responsibility. In case the JV is not legally constituted at the time of bid submission, the bid security or bid securing declaration shall be in the names of all future members as named in the letter of bid.

18. **Withdrawal of Bids**

18.1. Before bid submission deadline, any bidder may withdraw, substitute, or modify its bid after it has been submitted by sending a written notice, duly signed by an authorized representative, and the corresponding must accompany the respective written notice.

19. **Format and Signing of Bid**

19.1. The Bidder shall prepare and submit Bids through EPADS with due diligence after carefully reading all the terms and condition before bid submission deadline.

D. SUBMISSION OF BIDS

20. **Submission of Bids through EPADS v2.0**

20.1. All bids shall be submitted through EPADS v2.0.

21. **Deadline for Submission of Bids**

21.1. All bids shall be received through **EPADS v2.0** not later than bid submission deadline as specified in the **BDS**.

21.2. The Procuring agency/Employer may, under exceptional circumstances and at its discretion, extend the deadline for the submission of bids, pursuant to Rule 27 of the Public Procurement Rules, 2004. Extension of Time for submission of bid, by amending the Bidding Documents in accordance with ITB 7, in which case all rights and obligations of the Procuring agency/Employer and bidders previously subject to the deadline will thereafter be subject to the new deadline.

22. **Substitution and Modification of bids**

22.1. A bidder may substitute or modify his bid after it has been submitted, provided that written notice of the substitution or modification of the bid, is received by the Procuring agency/Employer prior to the deadline for submission of bids.

22.2. Revised bid may be submitted after the substitution or modification made in the original bid in accordance with the provisions referred in **ITB 18** .

E. OPENING AND EVALUATION OF BIDS

23. **Opening of Bids**

23.1. The Procuring Agency will open bids in accordance with Rule 28 of the Public Procurement Rules, 2004 and as specified in the BDS.

24. **Confidentiality**

24.1. Information relating to the examination, clarification, evaluation and comparison of bids and recommendation of contract award shall not be disclosed to bidders or any other persons not officially concerned with such process until the time of the announcement of the respective evaluation report.

25. **Clarification of Bids**

25.1. Clarification of Bidding Documents shall be carried out in accordance with Rule 31 of the Public Procurement Rules, 2004.

25.2. The alteration or modification in the bid which in any case affect the following parameters will be considered as a change in the substance of a bid:

25.2.1. evaluation & qualification criteria;

25.2.2. required scope of work;

25.2.3. contract price;

25.2.4. all securities requirements;

25.2.5. tax requirements;

25.2.6. terms and conditions of bidding documents.

25.2.7. change in the ranking of the bidder

26. **Preliminary Examination of Bids**

26.1. Prior to the detailed evaluation of bids, the Procuring agency/Employer will determine whether each bid:

26.1.1. meets the eligibility criteria defined in **ITB 3** and **ITB 4**;

26.1.2. has been prepared as per the format and contents defined by the Procuring agency/Employer in the bidding documents;

26.1.3. has been properly signed;

26.1.4. is accompanied by the required securities; and

26.1.5. is substantially responsive to the requirements of the bidding documents.

The Procuring agency/Employer's determination of a bid's substantial responsiveness will be based on the contents of the bid itself.

26.2. A substantially responsive Bid is one which conforms to all the terms, conditions, and specifications of the Bidding Documents, without material deviation or reservation. A material deviation or reservation is one that: -

26.2.1. affects in any substantial way the scope, quality, or performance of the Works;

26.2.2. limits in any substantial way, inconsistent with the bidding documents, the Procuring agency/Employer's rights or the bidders' obligations under the Contract; or

26.2.3. if rectified, would affect unfairly the competitive position of other bidders presenting substantially responsive bids.

26.3. The Procuring agency/Employer will confirm that the documents and information specified under ITB 9, 10 and 11 have been provided in the bid. If any of these documents or information is missing, or is not provided in accordance with the Instructions to Bidders, the bid shall be rejected.

26.4. The Procuring agency/Employer may waive-off any minor informality, nonconformity, or irregularity in a bid which does not constitute a material deviation, provided such waiver does not prejudice or affect the relative ranking of any Bidder.

Explanation: A minor informality, non-conformity or irregularity is one that is merely a matter of form and not of substance. It also pertains to some immaterial defect in a Bid or variation of a bid from the exact requirements of the invitation that can be corrected or waived without being prejudicial to other bidders. The defect or variation is immaterial when the effect on quantity, quality, or delivery is negligible when contrasted with the total cost or scope of the works. The Procuring agency/Employer either shall give the bidder an opportunity to cure any deficiency resulting from a minor

informality or irregularity in a bid or waive the deficiency, whichever is advantageous to the Procuring agency/Employer. Examples of minor informalities or irregularities include failure of a bidder to –

26.4.1. *Submit the number of copies of signed bids required by the invitation;*

26.4.2. *Furnish required information concerning the number of its employees;*

26.4.3. *the firm submitting a bid has formally adopted or authorized, before the date set for opening of bids, the execution of documents by typewritten, printed, or stamped signature and submits evidence of such authorization and the bid carries such a signature.*

26.5. Provided that a Technical Bid is substantially responsive, the Procuring agency/Employer may request the bidder to submit the necessary information or documentation, within a reasonable period of time, to rectify nonmaterial nonconformities or omissions in the Technical Bid related to documentation requirements. Requesting information or documentation on such nonconformities shall not be related to any such aspect of the technical Proposal linked with the ranking of the bidders. Failure of the bidder to comply with the request may result in the rejection of its bid.

26.6. Provided that a Technical Bid is substantially responsive, the Procuring agency/Employer shall rectify quantifiable nonmaterial nonconformities or omissions related to the Financial Proposal. To this effect, the Bid Price shall be adjusted, for comparison purposes only, to reflect the price of the missing or nonconforming item or component.

26.7. If a bid is not substantially responsive, it will be rejected by the Procuring agency/Employer and may not subsequently be evaluated for complete technical responsiveness.

27. **Examination of Terms and Conditions; Technical Evaluation**

27.1. The Procuring agency/Employer shall examine the bid to confirm that all terms and conditions specified in the **GCC** and the **PCC** have been

accepted by the bidder without any material deviation or reservation.

For this purpose:

“Deviation” means departure from the requirements specified in the Bidding Document.

“Reservation” means setting of limiting conditions or withholding from complete acceptance of the requirements specified in the Bidding Document.

27.2. The Procuring agency/Employer shall evaluate the technical aspects of the bid submitted in accordance with ITB 30, to confirm that all requirements specified in Section VI – Works Requirement, Technical Specifications of the Bidding Documents have been met without material deviation or reservation.

27.3. If after the examination of the terms and conditions and the technical evaluation, the Procuring agency/Employer determines that the bid is not substantially responsive in accordance with ITB 27, it shall reject the bid.

28. **Correction of Arithmetic Errors**

28.1. Bids determined to be substantially responsive will be checked for any arithmetic errors. Errors will be corrected as follows: -

28.1.1. if there is a discrepancy between unit prices and the sub-total price that is obtained by multiplying the unit price and quantity, the unit price shall prevail, and the sub-total price shall be corrected, unless in the opinion of the Procuring agency/Employer there is an obvious misplacement of the decimal point in the unit price, in which the total price as quoted shall govern and the unit price shall be corrected;

28.1.2. if there is an error in a total corresponding to the addition or subtraction of sub-totals, the sub-totals shall prevail, and the total shall be corrected; and

28.1.3. where there is a discrepancy between the amounts in figures and in words, the amount in words will govern.

28.1.4. Where there is discrepancy between grand total of price schedule and amount mentioned on the Form of Bid, the amount referred in Price Schedule shall be treated as correct subject to elimination of other errors.

28.2. The amount stated in the Bid will, be rectified by the Procuring agency/Employer in accordance with the above procedure for the correction of errors and, with, the concurrence of the bidder, shall be considered as binding upon the bidder. If the bidder does not accept the corrected amount, its bid shall be rejected after forfeiture of Bid Security or execution of the Bid Securing Declaration, as the case may be, in accordance with **ITB 41.3**.

29. **Conversion to Single Currency**

29.1. The unit rates and the prices shall be quoted by the bidder entirely in Pak rupees. A bidder expecting to incur expenditures in other currencies for inputs to the Works from outside the Procuring agency/Employer's country (referred to as the "Foreign Currency Requirements") shall indicate the same in the letter of bid-financial proposal. The proportion of the Bid Price (excluding Provisional Sums) needed by him for the payment of such Foreign Currency Requirements either (i) entirely in the currency of the Bidder's home country or, (ii) at the bidder's option, entirely in Pak rupees provided always that a bidder expecting to incur expenditures in a currency or currencies other than those stated in (i) and (ii) above for a portion of the foreign currency requirements, and wishing to be paid accordingly, shall indicate the respective portions in his bid. Comparison of bids quoted in different currencies and conversion of bids into a single currency shall be carried out in accordance with Rule 30(2) of the Public Procurement Rules, 2004**.**

30. **Evaluation of Bids**

30.1. The Procuring agency/Employer shall evaluate and compare only the bids determined to be substantially responsive, pursuant to **ITB 27**.

30.2. In evaluating the Technical Proposal of each Bid, the Procuring agency/Employer shall use the criteria and methodologies listed in the BDS

and in terms of works requirement. No other evaluation criteria or methodologies shall be permitted.

30.3. The Procuring agency/Employer's evaluation of a bid will take into account:

30.3.1. the bid price, excluding provisional sums and the provision, if any, for contingencies in the summary bill of quantities, but including day work items, where priced competitively;

30.3.2. converting the amount resulting from applying above, if relevant, to a single currency in accordance with ITB 29;

30.4. The estimated effect of the price adjustment provisions of the Conditions of Contract, applied over the period of execution of the Contract, shall not be taken into account in bid evaluation.

30.5. If these bidding documents allow bidders to quote separate prices for different lots, and the award to a single bidder of multiple lots, the methodology of evaluation to determine the lowest evaluated lot combinations in the Form of Bid, is specified in the **BDS**.

30.6. If the bid, which results in the Evaluated Bid Price (Successful Bid), is seriously unbalanced or front loaded in the opinion of the Employer, the Employer may require the Bidder to produce detailed price analyses for any or all items of the Bill of Quantities, to demonstrate the internal consistency of those prices with the construction methods and schedule proposed. After evaluation of the price analyses, taking into consideration the schedule of estimated Contract payments, the Employer may require that the amount of the performance security be increased at the expense of the Bidder to a level sufficient to protect the Employer against financial loss in the event of default of the successful Bidder under the Contract.

Explanation:

"Unbalanced" or "front-loaded" bids consist of deliberately submitting bids with artificially high prices or unit rates for the early stages of a construction project, offset by artificially low prices or unit rates for the later stages of the project, to improve the contractor's cash flow.

31. **Domestic Preference**

31.1. If the **BDS** so specifies, the Procuring agency/Employer will grant a margin of preference to the domestic contractor in line with the rules, regulations, regulatory guides or instructions issued by the Authority from time to time.

32. **Determination of Successful Bid**

32.1. The Procuring agency/Employer shall compare the evaluated bids in accordance with the predefined bidding procedure, of all substantially responsive bids to determine the Successful bidder.

33. **Qualification of Bidder**

33.1. The Procuring agency/Employer shall determine to its satisfaction whether the bidder is substantially responsive and whose bid is declared as Successful bid either continues to meet (if prequalification applies) or meets (if post-qualification applies) the qualifying criteria specified in Evaluation and Qualification Criteria.
Note: In case of international bidding, the parameters for incorporation or licensing within Pakistan may be fulfilled as part of post qualification.

33.2. The determination shall be based upon an examination of the documentary evidence of the bidder's qualifications submitted by the bidder, pursuant to **ITB 11**.

33.3. Prior to contract award, the Procuring agency/Employer will verify that the successful bidder (including each member of a JV) is not blacklisted/debarred. The Procuring agency/Employer will conduct the same verification for each sub-contractor proposed by the successful bidder.

34. **Sub-Contractors**

34.1. The bidder shall provide details regarding any specialized sub-contractor to the Procuring agency/Employer. In case change of sub-contractors, the bidder shall promptly notify the Procuring agency/Employer and obtain approval for replacement of sub-contractors.

34.2. Bidders may propose sub-contracting up to the percentage of total value of contracts or the volume of works as specified in the **BDS**.

35. **Abnormally Low Financial Bid**

35.1. A procuring Agency may reject abnormally low bids. The decision of the Procuring agency/Employer to reject a bid and reasons for the decision shall be recorded in the procurement proceedings and promptly communicated to the bidder concerned. Moreover, the Procuring agency/Employer shall not incur any liability solely by rejecting abnormally bid

Guidance for Procuring agency/Employer:

An abnormally low bid means, in the light of the Procuring agency/Employer's estimate and of all the bids submitted, the bid appears to be abnormally low by not providing a margin for normal levels of profit. In order to identify the Abnormally Low Bid (ALB) following approaches can be considered to minimize the scope of subjectivity:

35.1.1. Comparing the bid price with the cost estimate;

35.1.2. Comparing the bid price with the bids offered by other bidders submitting substantially responsive bids; and

35.1.3. Comparing the bid price with prices paid in similar contracts in the recent past either government- or development partner-funded.

35.2. The Procuring agency/Employer will determine to its satisfaction whether the bidder that is selected as having submitted the successful bid is qualified to perform the contract satisfactorily, in accordance with the criteria listed in **ITB 11**

35.3. The determination will take into account the bidder's financial and technical capabilities. It will be based upon an examination of the documentary evidence of the bidder's qualifications submitted by the bidder, pursuant to **ITB 11**, as well as such other information as the Procuring agency/Employer deems necessary and appropriate. Factors not included in these bidding documents shall not be used in the evaluation of the bidders' qualifications.

35.4. Procuring agency/Employer may seek “Certificate for Independent Price Determination” from the bidder and the results of reference checks may be used in determining award of contract.

Explanation: The Certificate shall be furnished by the bidder. The bidder shall certify that the price is determined keeping in view of all the essential aspects such as raw material, its processing, value addition, optimization of resources due to economy of scale, transportation, insurance and margin of profit etc.

35.5. An affirmative determination will be a prerequisite for award of the contract to the bidder. A negative determination will result in rejection of the bidder’s bid, in which event the Procuring agency/Employer will proceed to the next ranked bidder to make a similar determination of that bidder’s capabilities to perform satisfactorily.

F. AWARD OF CONTRACT

36. **Criteria of Award**

36.1. Subject to **ITB 36 and 37**, the Procuring agency/Employer will award the Contract to the bidder whose bid has been determined to be substantially responsive to the bidding documents and who has been declared as Successful Bidder, provided that such bidder has been determined to be:

36.1.1. eligible in accordance with the provisions of **ITB 3**;

36.1.2. is determined to be qualified to perform the Contract satisfactorily; and

36.1.3. Successful negotiations have been concluded, if any.

37. **Negotiations**

37.1. The Committee of the Procuring agency/Employer may negotiate with the Most Advantageous Bidder relating to the following areas:

37.1.1. a minor alteration to the technical (drawings, design technical specifications) details of the statement of works;

37.1.2. Methodology, work plan, staffing in view to streamline the work;

37.1.3. a minor amendment to the Particular conditions of Contract;

37.1.4. finalizing payment arrangements;

37.1.5. clarifying details that were not apparent or could not be finalized at the time of Bidding;

37.2. Where negotiation fails to result into an agreement, the Procuring agency/Employer may invite the next ranked bidder for negotiations. Where negotiations are commenced with the next ranked bidder, the Procuring agency/Employer shall not reopen earlier negotiations.

38. **Procuring agency's Right to reject All Bids**

38.1. The procuring agency has the right to reject all bids in accordance with Rule 33 of the Public Procurement Rules, 2004. However, the Authority (i.e. **PPRA**) may call from the Procuring agency/Employer the justification of those grounds.

39. **Notification of Award**

39.1. The procuring agency shall announce and publish the evaluation result in accordance with Rule 35 of the Public Procurement Rules, 2004.

39.2. Where no complaints have been lodged, the bidder whose bid has been accepted will be notified of the award by the Procuring agency/Employer prior to expiration of the bid validity period through EPADS. However, the Procuring agency/Employer shall not award any procurement contract at least for five (05) days after the announcement of final evaluation report. The notification letter (herein after and in the condition of the contract and contract form called “Letter of Acceptance” will specify the sum that the Procuring agency/Employer will pay the successful bidder in consideration for the execution and completion of the

works as prescribed by the Contract (hereinafter and in the Contract called the "Contract Price).

39.3. The notification of award will constitute the formation of the Contract, subject to the bidder furnishing the Performance Security (or guarantee) in accordance with **ITB 41** and signing of the contract in accordance with **ITB 40**.

39.4. Upon the successful bidder's furnishing of the performance security (or guarantee) pursuant to **ITB 41**, the Procuring agency/Employer will promptly notify each unsuccessful bidder, the name of the successful bidder and the Contract amount and will discharge the Bid Security or Bid Securing Declaration of the bidder(s) pursuant to **ITB 17**.

40. **Signing of Contract**

40.1. Promptly after notification of award, Procuring agency/Employer shall send the successful bidder the draft agreement, incorporating all terms and conditions as agreed by the parties to the contract.

40.2. Immediately after the Redressal of grievance by the **GRC**, and after fulfillment of all conditions precedent of the Contract Form, the successful bidder and the Procuring agency/Employer shall sign the contract.

40.3. Where no formal signing of a contract is required, work order issued to the bidder shall be construed to be the contract.

41. **Performance Security (or Guarantee)**

41.1. After the receipt of the Letter of Acceptance, the successful bidder, within the specified time, shall deliver to the Procuring agency/Employer a Performance Guarantee in the amount and in the form stipulated in the BDS and PCC, denominated in the type and proportions of currencies in the Letter of Acceptance and in accordance with the Conditions of Contract.

41.2. If the Performance Guarantee is provided by the successful bidder and it shall be in the form specified in the BDS which shall be in any of the following:

41.2.1. certified cheque, cashier's or manager's cheque, or bank draft;

41.2.2. irrevocable letter of credit issued by a scheduled bank of Pakistan or in the case of an irrevocable letter of credit issued by a foreign bank, the letter shall be confirmed or authenticated by a scheduled bank of Pakistan;

41.2.3. bank guarantee confirmed by a reputable local bank or, in the case of a successful foreign bidder, bonded by a foreign bank; or

41.2.4. surety bond callable upon demand issued by any reputable surety or insurance company.

Any Performance Guarantee submitted shall be enforceable in Pakistan.

41.3. Failure of the Most Advantageous Bidder to comply with the requirement of **ITB 40** shall constitute sufficient grounds for the annulment of the award and forfeiture of the Bid Security or declare blacklisted (in case bid securing declaration is submitted) in which event the Procuring agency/Employer may make the award to the next most advantageous bidder or reinitiate the procurement process afresh (as a case may be).

42. **Advance Payment**

42.1. Advance payment will be provided to the bidder in percentage and in the manner as agreed by the both parties in terms of Conditions of the Contract.

42.2. The Procuring agency/Employer will provide an advance payment as stipulated in the Conditions of Contract, subject to a maximum amount, as stated and/or Conditions of the Contract. The advance payment request shall be accompanied by an advance payment security (guarantee) in the form provided in Section X. For the purpose of receiving the advance payment, the bidder shall make and estimate of, and include in its bid, the expenses that will relate to the purchase of equipment, machinery, materials, and on the engagement of labor during the first month beginning with the date of the Procuring agency/Employer's "**Notice to Commence**" as specified in the **PCC**.

43. **General Performance of the Bidders**

43.1. The Procuring agency/Employer reserves the right to obtain information regarding performance of the bidders on their previously awarded contracts / works. The Procuring agency/Employer may seek information / report from the previous employer for consideration. However, the Procuring agency/Employer shall incorporate such parameters in the evaluation criteria and accordingly decide the fate of the bid submitted.

44. **Corrupt & Fraudulent Practices**

44.1. Procuring agencies (including beneficiaries of Government funded projects and procurement) as well as Bidders/Suppliers/Contractors under Government financed contracts, observe the highest standard of ethics during the procurement and execution of such contracts, and will avoid to engage in any corrupt and fraudulent practices.

G. GRIEVANCE REDRESSAL & COMPLAINT REVIEW MECHANISM

45. **Grievance Redressal**

45.1. Grievance Redressal shall be carried out in accordance with Rule 48 of the Public Procurement Rules, 2004 i.e. Redressal of grievances by the procuring agency and “Redressal of Grievances Regulations 2021”.

H. MECHANISM OF BLACKLISTING

46. **Mechanism of Blacklisting**

46.1. The Procuring agency/Employer shall proceed Blacklisting of Bidders/Contractors in accordance with Rule 19 of the Public Procurement Rules, 2004 i.e. Blacklisting and “Blacklisting and Debarment of Bidders or Contractors Regulations 2024.

Bid Data Sheet

Bids Data Sheet (BDS)

The following specific data for the procurement of Goods to be procured shall complement, supplement, or amend the provisions in the Instructions to Bidders (ITB). Whenever there is a conflict, the provisions herein shall prevail over those in ITB.

BDS Clause Number	ITB Number	Amendments of, and Supplements to, Clauses in the Instruction to Bidders
A. Introduction		
1	**1.1**	Name of Procuring Agency:**Islamabad Club (Islamabad Club)** The subject of procurement is:**Supply, Installation, Testing and Commissioning of a New Passenger Elevator at the Club Masjid, Islamabad Club** Expected commencement date: **Thursday, November 5, 2026**
2.	**2.1**	Financial year for the operations of the Procuring Agency:**2026-27** Name and identification number of the Contract: **P145845**
3.	**3.1**	JV/Consortium or AssociationAllowed: **No** Number of JV/Consortium Members: **Nil**
B. Bidding Documents		

4.	**6.2 & 6.4**	The Bidders may seek clarifications through **EPADS v2.0**: Clarification Date: Friday, October 23, 2026 Pre-Bid Meeting: Monday, October 19, 2026 11:00 AM Venue: Islamabad Club Main Murree Road, Kashmir Road
5.	**7.2**	Any addendum, in case issued, shall be published on **Islamabad Club (Islamabad Club)** website and on **EPADS v2.0**.
C. Preparation of Bids		
6.	**8.1**	List of documents required along with the bid: No
7.	**9.1**	The qualification criteria to establish the supply / production capability of the bidder. *see Eligibility Criteria*
8.	**11.2**	**Works and Their relateddocuments:** *See section Required Scope of Work*
9.	**11.1**	Price schedule will be provided according to the format defined and acquired. *see section price schedule.*
10.	**11.4**	**Specifications:** *see section of specifications.*

11.	**11.5 & 13.5**	The price shall be **Fixed**. The bid price shall be adjusted in accordance with Appendix provided – Formula for Price Adjustment.
12.	**14.1**	Currency of the Bids shall be : **PKR**
13.	**16.1**	The Bids/Bid Validity period shall be: **120 Days**
14.	**17.1**	The amount of Bid Security shall be as defined in Bid Security Section for items and lots given in **BDS 6**
15.	**17.2**	The Bid Security shall be in the form of: **Pay Order, Banker's Cheque, Call at Deposit, Bank Guarantee**
16.	**15.1**	Alternative Bids to the requirements of the bidding documents willnot be permitted.
D. Submission of Bids		
17.	**18.1 & 21.1**	Bid shall be submitted online on EPADS v2.0 whereas hard copy of the bid security should be submitted to the following; **Islamabad Club Main Murree Road, Kashmir Road, Islamabad Capital Territory** Bids that are not submitted on EPADS v2.0 shall be disqualified. The deadline for Bids submission is: **Monday, October 26, 2026 11:00 AM**

E. Opening and Evaluation of Bids

18.	**24.1**	The Bids opening shall take place on **EPADS v2.0**. Day *:* ***Monday*** Date:***October 26, 2026*** Time *:* ***11:30 AM***
19.	**30.2**	Selection technique adopted will be: **Quality and Cost Based Selection (QCBS)** *see Evaluation Criteria*

F. Award of Contract

20.	**41.1 & 41.2**	The Performance guarantee shall: **10.00%**. The Performance Guarantee shall be acceptable in the form of:**Pay Order, Banker's Cheque, Call at Deposit, Bank Guarantee**
21.	**45.1**	Arbitrator shall be appointed by mutual consent of the both parties.

G. Review of Procurement Decisions

22.	**37**	Grievance against this procurement shall be submitted online on EPADS v2.0.

Eligibility Criteria

Bidder's Type	Required Registration
Individual / Individual Consultant Sole Proprietorship Partnership Firm Company (Private Limited) Company (Public Limited) Company (Holding Company) Company (Limited by Guarantee) State Owned Enterprise (Private Limited) State Owned Enterprise (Public Limited)	None

Eligibility Criteria	Document
Legal Status The Bidder must be a legal entity registered with the Securities and Exchange Commission of Pakistan (SECP) or relevant authority. Valid SECP registration certificate / Partnership Deed. - National Tax Number (NTN) certificate.	Yes
Tax Compliance The Bidder must be registered with the Federal Board of Revenue (FBR) for Income Tax and Sales Tax and be listed on the Active Taxpayers List (ATL). Valid Active Taxpayer Certificate (Income Tax) from FBR website. - Valid Active Taxpayer Certificate (Sales Tax) from FBR website	Yes
Litigation History No pending or concluded litigation that could materially and adversely affect the capacity to perform the contract. - An affidavit (on stamp paper of PKR 100, duly notarized) declaring no such litigation exists.	Yes

Blacklisting The Bidder must not be blacklisted or debarred by any government, semi-government, or autonomous body in Pakistan or abroad. An undertaking as per Annex C (which includes a declaration of not being blacklisted).	Yes

PUBLIC PROCUREMENT REGULATORY AUTHORITY (PPRA) EPADS

Evaluation Criteria

Quality and Cost Based Selection (QCBS)

Weightage

Technical Evaluation %	Financial Evaluation %
70	30

Technical Marks	100
Passing Marks	**70**
Technical Evaluation Criteria	
Financial Capacity Average annual turnover from similar works (supply/installation of lifts/elevators/MEP works) in last three (03) years Audited Financial Statements or Income Tax Returns with Financial Statements for the last three years clearly showing turnover (Qualitative)(Doc Required) 15 Million or above **(45)** 10-14.99 Million **(30)** 5- 9.99 Million **(15)**	45

Past Experience Number of Projects: Successfully completed involving the supply and installation of Elevators/lifts in the last seven (07) years (counted from the date of bid submission). B. Project Value: At least one (01) of these projects must have a contract value of PKR 5.0 Million or Above Completion Certificates (Satisfactory Performance Report) from the client for each project. (Qualitative)(Doc Required) 3 Projects or above **(45)** 2 Projects or above **(30)** 1 Project **(15)**	45
Manufacturer Authorization The Bidder must be an authorized distributor/representative of the proposed elevator manufacturer for Pakistan, or have a specific authorization to bid for this project. The proposed elevator brand must have a proven track record in Pakistan, with evidence of after-sales service and spare parts availability. (Qualitative) (Doc Required) Manufacturer's Authorization Letter **(10)**	10

Jobs/Lots

Jobs Without Lots :

Job	Delivery Schedule	Quantity	Bid Security

Supply, Installation, Testing and Commissioning of a New Passenger Elevator at the Club Masjid, Islamabad Club	Address: Islamabad Club Main Murree Road, Kashmir Road, Islamabad Capital Territory Schedule: 100 Days Quantity: 1/Qty	1/Qty	250000 PKR

PUBLIC PROCUREMENT REGULATORY AUTHORITY (PPRA) EPADS

Related Services :

No

PUBLIC PROCUREMENT REGULATORY AUTHORITY (PPRA) EPADS

Work Specifications and Market Rates

Jobs Without Lots :

Job: Supply, Installation, Testing and Commissioning of a New Passenger Elevator at the Club Masjid, Islamabad Club

Specifications / Requirements:

Sr. No	Ref. No.	Description	Unit	Qty	Rate		Amount
1	1	Supply, Installation, Testing and Commissioning of a New Passenger Elevator at the Club Masjid, Islamabad Club	1	1	5000000	5 Million Rupees	5000000
						GRAND TOTAL:	Rs5,000,000.00

Scope of Work

Please Find attached BOQ ,Technical Data Sheet & Drawings

PUBLIC PROCUREMENT REGULATORY AUTHORITY (PPRA) EPADS

Price Schedule

For Individual Jobs

#	Job Title	Quantity	Unit Price (PKR)	Total Price (PKR)	Delivery Location	Delivery Period / Year	Country of Origin
1							
2							

For Lots

#	Lot Title	Total Lot Price (PKR)	Country of Origin
1	[Lot 1 Title]		

PUBLIC PROCUREMENT REGULATORY AUTHORITY
(PPRA)
EPADS

General Conditions of Contract

A. General

1. **Definitions**

1.1. Unless the context otherwise requires, the following terms whenever used in this Contract shall have the same meaning and shall be interpreted as indicated

1.1.1. “Applicable Law” means the laws and any other instruments having the force of law in the Government’s Country, or in such other country as may be specified in the Special Conditions of the Contract (SC), as they may be issued and in force from time to time;

1.1.2. “The Contract” means an agreement enforceable by law;

1.1.3. “The Contract Price” means the price payable to the Contractor under the Contract for the full and proper performance of its contractual obligations;

1.1.4. “The Services” means the work to be performed by the Contractor pursuant to this Contract and as prescribed in the Specifications and Schedule of Activities included in the Contractor’s Bid;

1.1.5. “Ancillary Services” means those services ancillary to the provision of Services, such as transportation and insurance, and any other incidental services, such as installation, commissioning, provision of technical assistance, training, and other such obligations of the Contractor covered under the Contract;

1.1.6. “GCC” means the General Conditions of Contract contained in this section;

1.1.7. “SCC” means the Special Conditions of Contract by which the GCC may be amended or supplemented;

1.1.8. **“**Day” means calendar day unless indicated otherwise;

1.1.9. “Effective Date” means the date on which this Contract comes into force and effect;

1.1.10. “The Contractor” means the individual or corporate body whose Bids to provide the Services has been accepted by the Procuring Agency;

1.1.11. “The Project Site,” where applicable, means the place or places named in Bid Data Sheet and technical Specifications;

1.1.12. “Government” means the Government of Pakistan;

1.1.13. “Local Currency” means the currency of Pakistan;

1.1.14. “In Writing” means communicated in written form with proof of receipt;

1.1.15. “Completion Date” means the date of completion of the Services by the Contractor as certified by the Procuring Agency;

1.1.16. “Foreign Currency” means any currency other than the currency of the country of the Procuring Agency;

1.1.17. “Party” means the Procuring Agency or the Contractor, as the case may be, and “Parties” means both of them;

1.1.18. "Service" means any object of procurement other than goods or works;

1.1.19. “Subcontractor” means any entity to which the Bidder subcontracts any part of the Services.

2. **Applicable Law**

2.1. The contract shall be governed and interpreted in accordance with the laws of Pakistan, unless otherwise specified in SCC.

3. **Language**

3.1. The Contract as well as all correspondence and documents relating to the Contract exchanged between the Contractorand the Procuring Agency, shall be written in the **English language** unless otherwise stated in the **SCC** . Supporting documents and printed literature that are part of the Contract may be in another language provided these are accompanied by an accurate translation of the relevant passages in English, in which case, for purposes of interpretation of the Contract, this translation shall govern.

4. **Notices**

4.1. Any notice, request, or consent made pursuant to this Contract shall be in writing and shall be deemed to have been made when delivered in person to an authorized representative of the Party to whom the communication is addressed, or when sent by registered mail, telex, telegram, or facsimile to such Party at the address specified in the **SCC**.

5. **Location**

5.1. The Services shall be performed at such locations as the Procuring Agency may approve and as specified in **SCC.**

5.2. A {DOCUMENTS}

6. **Authorized Representatives / Authority of Member in charge**

6.1. Any action required or permitted to be taken, and any document required or permitted to be executed, under this Contract by the Procuring Agency or the Contractor may be taken or executed by the officials specified in the **SCC**.

B. Commencement, Completion, Modification, and Termination of Contract

7. **Effectiveness of Contract**

7.1. This Contract shall come into effect on the date the Contract is signed by both parties and such other later date as may be stated in the **SCC.**

8. **Commencement of Services**

8.1. The Contractor shall confirm availability of Key Experts and begin carrying out the Services not later than the number of days after the Effective Date specified in the **SCC.**

9. **Program schedule**

9.1. Before commencement of the Services, the Contractor shall submit to the Procuring Agency for approval a Program showing the general methods, arrangements, order and timing for all activities. The Services shall be carried out in accordance with the approved Program as updated.

10. **Starting Date/Expiration Date**

10.1. The Contractor shall start carrying out the Services Five (05) days after the date the Contract becomes effective, or at such other date as may be specified in the **SCC.**

10.2. Unless terminated earlier pursuant to Clause **GCC 14** hereof, this Contract shall expire at the end of such time period after the Effective Date as specified in the **SCC.**

11. **Entire Agreement**

11.1. This Contract contains all covenants, stipulations and provisions agreed by the Parties. No agent or representative of either Party has authority to make, and the Parties shall not be bound by or be liable for, any statement, representation, promise or agreement not set forth herein.

12. **Modification**

12.1. Any modification or variation of the terms and conditions of this Contract, including any modification or variation of the scope of the Services, may only be made by written agreement between the Parties. However, each Party shall give due consideration to any modification(s) or variation(s) made by the other Party.

12.2. In cases of any modification(s) or variation(s), the prior written consent of the Procuring Agency is required.

13. **Force Majeure**

13.1. **Definition**
For the purposes of this Contract, “Force Majeure” means an event which is beyond the reasonable control of a Contractor and which makes a Contractor’s performance of its obligations under the Contract impossible or so impractical as to be considered impossible under the circumstances.

13.2. **No Breach of Contract**
The failure of a Party to fulfill any of its obligations under the contract shall not be considered to be a breach of, or default under, this Contract in so far as such inability arises from an event of Force Majeure, provided that the Party affected by such an event (a) has taken all reasonable precautions, due care and reasonable alternative

measures in order to carry out the terms and conditions of this Contract, and (b) has informed the other Party as soon as possible about the occurrence of such an event.

13.3. **Extension of Time**
Any period within which a Contractor shall, pursuant to this Contract, complete any action or task, shall be extended for a period equal to the time during which such Party was unable to perform such action as a result of Force Majeure.

13.4. **Payments**
During the period of their inability to perform the Services as a result of an event of Force Majeure, the Contractor shall be entitled to continue to be paid under the terms of this Contract, as well as to be reimbursed for additional costs reasonably and necessarily incurred by them during such period for the purposes of the Services and in reactivating the Service after the end of such period.

14. **Termination**

14.1. **By the Procuring Agency**
The Procuring Agency may terminate this Contract in case of the occurrence of any of the events specified in paragraphs (a) through (e) of this Clause. In such an occurrence the Procuring Agency shall give at least thirty (30) calendar days' written notice of termination to the Contractor in case of the events referred to in (a) through (d); at least sixty (60) calendar days' written notice in case of the event referred to in (e);

14.1.1. If the Contractor fails to remedy a failure in the performance of its obligations hereunder, as specified in a notice of suspension;

14.1.2. If the Contractor becomes (or, if the Contractor consists of more than one entity, if any of its members becomes) insolvent or bankrupt or enter into any agreements with their creditors for relief of debt or take advantage of any law for the benefit of debtors or go into liquidation or receivership whether compulsory or voluntary;

14.1.3. If the Contractor fails to comply with any final decision reached as a result of arbitration proceedings;

14.1.4. If, as the result of Force Majeure, the Contractor is unable to perform a material portion of the Services for a period of not less than sixty (60) calendar days;

14.1.5. If the Procuring Agency, in its sole discretion and for any reason whatsoever, decides to terminate this Contract;

14.2. **By the Contractor**
The Contractor may terminate this Contract, by not less than thirty (30) calendar days' written notice to the Procuring Agency, in case of the occurrence of any of the events specified in paragraphs (a) through (d) of this Clause.

14.2.1. If the Procuring Agency fails to pay any money due to the Contractor pursuant to this Contract and not subject to dispute within forty-five (45) calendar days after receiving written notice from the Contractor that such payment is overdue;

14.2.2. If, as the result of Force Majeure, the Contractor is unable to perform a material portion of the Services for a period of not less than sixty (60) calendar days;

14.2.3. If the Procuring Agency fails to comply with any final decision reached as a result of arbitration;

14.2.4. If the Procuring Agency is in material breach of its obligations pursuant to this Contract and has not remedied the same within forty-five (45) days (or such longer period as the Bidder may have subsequently approved in writing) following the receipt by the Procuring Agency of the Contractor's notice specifying such breach.

C. Obligations of the Contractor

15. **General**

15.1. **Standard of Performance**

15.1.1. The Contractor shall perform the Services and carry out the Services with all due diligence, efficiency and economy, in accordance with generally accepted professional standards and practices, and shall observe sound management practices, and employ appropriate technology and safe and effective equipment, machinery, materials and methods. The Contractor shall always act, in respect of any matter relating to this Contract or to the Services, as a faithful adviser to the Procuring Agency, and shall at all times support and safeguard the Procuring Agency's legitimate interests in any dealings with the third parties;

15.1.2. The Contractor shall employ and provide such qualified and experienced Experts and Sub-Contractors as are required to carry out the Services.

15.2. **Law Applicable to Services**
The Contractor shall perform the Services in accordance with the Contract and in accordance with the Law of Pakistan and shall take all practicable steps to ensure that any of its Experts and Sub-Bidders, comply with the Applicable Law.

16. **Conflict of Interests**

16.1. **Contractor Not to Benefit from Commissions and Discounts**
The remuneration of the Contractor shall constitute the Contractor's sole remuneration in connection with this Contract or the Services, and the Contractor shall not accept for their own benefit any trade commission, discount, or similar payment in connection with activities pursuant to this Contract or to the Services or in the discharge of their obligations under the Contract, and the Contractor shall use their best efforts to ensure that the Personnel, any Subcontractors, and agents of either of them similarly shall not receive any such additional remuneration.

16.2. **Contractor and Affiliates Not to be Otherwise Interested in Project**
The Contractor agree that, during the term of this Contract and after its termination, the Contractor and its affiliates, as well as any Subcontractor and any of its affiliates, shall be disqualified from providing Services (other than the Services and any continuation thereof) for any project resulting from or closely related to the Services.

16.3. **Prohibition of Conflicting Activities**
Neither the Bidder nor its Subcontractors nor the Personnel shall engage, either directly or indirectly, in any of the following activities:

16.3.1. during the term of this Contract, any business or professional activities in the Government's country which would conflict with the activities assigned to them under this Contract;

16.3.2. during the term of this Contract, neither the Contractor nor their Subcontractors shall hire public employees in active duty or on any type of leave, to perform any activity under this Contract;

16.3.3. after the termination of this Contract, such other activities as may be specified in the **SCC.**

17. **Insurance to be Taken Out by the Contractor**

17.1. The Contractor(a) shall take out and maintain, and shall cause any Subcontractors to take out and maintain, at its (or the Sub-contractors', as the case may be) own cost but on terms and conditions approved by the Procuring Agency, insurance against the risks, and for the coverage, as shall be specified in the **SCC**; and (b) at the Procuring Agency's request, shall provide evidence to the Procuring Agency showing that such insurance has been taken out and maintained and that the current premiums have been paid.

18. **Contractor's Actions Requiring Procuring Agency's Prior Approval**

18.1. The Contractor shall obtain the Procuring Agency's prior approval in writing before taking any of the following actions:

18.1.1. appointing such members of the Personnel not provided by the Contractor;

18.1.2. changing the Program of activities; and

18.1.3. any other action that may be specified in the **SCC.**

19. **Reporting Obligations**

19.1. The Contractor shall submit to the Procuring Agency the reports and documents in the numbers, and within the periods as prescribed by the Procuring Agency.

20. **Liquidated Damages**

20.1. **Payments of Liquidated Damages**
The Contractor shall pay liquidated damages to the Procuring Agency at the rate per day stated in the **SCC** for each day that the Completion Date is later than the Intended Completion Date. The total amount of liquidated damages shall not exceed the amount defined in the **SCC**. The Procuring Agency may deduct liquidated damages from payments due to the Contractor. Payment of liquidated damages shall not affect the Contractor's liabilities.

20.2. **Correction for Over-payment**
If the Intended Completion Date is extended after liquidated damages have been paid, the Procuring Agency shall correct any overpayment of liquidated damages by the Contractor by adjusting the next payment certificate. The

Contractor shall be paid interest on the overpayment, calculated from the date of payment to the date of repayment, at the rates specified in **SCC.**

20.3. **Lack of performance penalty**
If the Contractor has not corrected a Defect within the time specified in the Procuring Agency's notice, a penalty for Lack of performance will be paid by the Contractor. The amount to be paid will be calculated as a percentage of the cost of having the Defect corrected, assessed as specified in the Contractor

21. **Performance Guarantee**

21.1. Within the time stipulated in the acceptance letter from the Procuring Agency, the successful Bidder shall furnish the Performance Guarantee in shape and amount **specified in SCC.**

21.2. The proceeds of the Performance Guarantee shall be payable to the Procuring agency as compensation for any loss resulting from the Supplier's failure to complete its obligations under the Contract.

21.3. The Performance Guarantee shall be denominated in the currency of the Contract, or in a freely convertible currency acceptable to the Procuring agency and shall be in the acceptable form as specified in **SCC**.

21.4. The Performance Guarantee will be discharged by the Procuring agency and returned to the Supplier not later than thirty (30) days following the date of completion of the Supplier's performance obligations under the Contract, including any warranty obligations, unless otherwise **specified in SCC.**

22. **Sustainable Procurement**

22.1. The Contractor shall conform to the sustainable procurement contractual provisions, if and as specified in the **SCC.**

D. Contractor's Personnel

23. **Description of Personnel**

23.1. The titles, agreed job descriptions, minimum qualifications, and estimated periods of engagement in the carrying out of the Services of the Contractor's Key Personnel. The Key Personnel listed by title as well as by name are hereby approved by the Procuring Agency.

24. **Removal and / or Replacement of Personnel**

24.1. Except as the Procuring Agency may otherwise agree, no changes shall be made in the Key Personnel. If, for any reason beyond the reasonable control of the Contractor, it becomes necessary to replace any of the Key Personnel, the Contractor shall provide as a replacement a person of equivalent or better qualifications.

24.2. If the Procuring Agency finds that any of the Personnel have (i) committed serious misconduct or have been charged with having committed a criminal action, or (ii) have reasonable cause to be dissatisfied with the performance of any of the Personnel, then the Contractor shall, at the Procuring Agency's written request specifying the grounds thereof, provide as a replacement a person with qualifications and experience acceptable to the Procuring Agency.

24.3. The Contractor shall have no claim for additional costs arising out of or incidental to any removal and/or replacement of Personnel.

E. Obligations of the Procuring Agency

25. **Change in the Applicable Law**

25.1. If, after the date of this Contract, there is any change in the Applicable Law with respect to taxes and duties which increases or decreases the cost of the Services rendered by the Contractor, then the remuneration and reimbursable expenses otherwise payable to the Contractor under this Contract shall be increased or decreased accordingly by agreement between the Parties, and corresponding adjustments shall be made to the amounts referred in the **SCC.**

26. **Services and Facilities**

26.1. The Procuring Agency shall make available to the Contractor and the Experts, for the purposes of the Services and free of any charge, the services, facilities and property described in the Terms of Reference, at the times and in the manner specified in the Terms of Reference.

26.2. In case that such services, facilities and property shall not be made available to the Contractor, the Parties shall agree on (i) any time extension that it may be appropriate to grant to the Contractor for the performance of the Services, (ii) the manner in which the Contractor shall procure any such services, facilities and property from other sources, and (iii) the additional payments, if any, to be made to the Contractor as a result thereof.

F. Payments to the Contractor

27. **Contract Price**

27.1. The price payable shall be in Pakistani Rupees unless otherwise specified in the **SCC**.

28. **Terms and Conditions of Payment**

28.1. Payments will be made to the Contractor according to the payment schedule stated in the **SCC** and as per actual invoice submitted by the Contractor.

28.2. Unless otherwise stated in the **SCC**, the advance payment shall be made against the provision by the Contractor of a bank guarantee for the same amount, and shall be valid for the period stated in the **SCC.** Any other payment shall be made after the conditions listed in the **SCC** for such payment have been met, and the Contractor have submitted an invoice to the Procuring Agency specifying the amount due.

29. **Quality Control Identifying Defects**

29.1. The principle and modalities of Inspection of the Services by the Procuring Agency shall be as indicated in the **SCC.** The Procuring Agency shall check the Contractor's performance and notify him of any Defects that are

found. Such checking shall not affect the Contractor's responsibilities. The Procuring Agency may instruct the Contractor to search for a Defect and to uncover and test any service that the Procuring Agency considers may have a Defect. Defect Liability Period is as defined in the **SCC**.

29.2. A {INSPECTION}

30. **Correction of Defects, and Lack of Performance Penalty**

30.1. The Procuring Agency shall give notice to the contractor of any Defects before the end of the Contract. The Defects liability period shall be extended for as long as Defects remain to be corrected.

30.2. Every time notice a Defect is given; the contractor shall correct the notified Defect within the length of time specified by the Procuring Agency's notice.

30.3. If the contractor has not corrected a Defect within the time specified in the Procuring Agency's notice, the Procuring Agency will assess the cost of having the Defect corrected, the contractor will pay this amount, and a Penalty for Lack of Performance.

31. **Settlement of Disputes Amicable Settlement**

31.1. The Parties shall use their best efforts to settle amicably all disputes arising out of or in connection with this Contract or its interpretation.

32. **Dispute Settlement**

32.1. **Arbitration**
If any dispute of any kind whatsoever shall arise between the procuring agency and the contractor in connection with or arising out of the Contract, including without prejudice to the generality of the foregoing, any question regarding its existence, validity or termination, or the execution of the contract, the parties shall seek to resolve any such dispute or difference by mutual consultation. If the parties fail to resolve such a dispute or difference even after negotiations or mediation, then the dispute shall be referred within fourteen (14) days in writing by either party to the Arbitrator, with a copy to the other party.
Any dispute in respect of which a notice of intention to commence arbitration has been given, in accordance with **GCC sub-clause 32.1**, shall be finally settled by arbitration. Arbitration may be commenced prior to or after completion of the Contract. Arbitration proceedings shall be conducted in accordance with Arbitration Act 1940. Notwithstanding any reference to arbitration herein, the parties shall continue to perform their respective obligations under the Contract unless otherwise agreed. The Procuring Agency shall continue to pay the Contractor any undisputed amounts due under the Contract during the resolution of any dispute.

Special Conditions of Contract

SECTION VIII. SPECIAL CONDITIONS OF CONTRACT

The following Special Conditions of Contract shall supplement the General Conditions of Contract. Whenever there is a conflict, the provisions herein shall prevail over those in the Conditions of Contract. The corresponding clause number of the GCC is indicated in parentheses.

Number of GC Clause

Amendments of, and Supplements to, Clauses in the General Conditions of Contract

Number of GC Clause 1

Definitions

The Procuring Agency is: Islamabad Club (Islamabad Club), Procurement Officer Islamabad Club Main Murree Road, Kashmir Road, Islamabad Capital Territory

The Supplier is:

The title of the subject procurement is: Supply, Installation, Testing and Commissioning of a New Passenger Elevator at the Club Masjid, Islamabad Club

Number of GC Clause 2

Applicable/Governing Law:

The Contract shall be interpreted in accordance with the laws of Islamic Republic of Pakistan

Number of GC Clause 3

Language:

The language of the Contract, all correspondence and communications to be given, and all other documentation to be prepared and supplied under the Contract shall be in **English.**

Number of GC Clause 4

Notices:

The addresses for the notices are:

Procuring Agency:

Islamabad Club (Islamabad Club), Procurement Officer
Islamabad Club Main Murree Road, Kashmir Road, Islamabad Capital Territory
+92-314-531-7545
arslan.javed@islamabadclub.org.pk

Contractor/ Bidder:

[Name, address and telephone number]

The Contractor/ Bidder's Representative(s)

[Name, address, telephone number and e-mail address]

Number of GC Clause 6.1

The Authorized Representatives are:

For the Procuring Agency:

Islamabad Club (Islamabad Club), Procurement Officer
Islamabad Club Main Murree Road, Kashmir Road, Islamabad Capital Territory
+92-314-531-7545
arslan.javed@islamabadclub.org.pk

For the Bidder:

Name: ……

Designation: ……..

Address: ……..

Number of GC Clause 7

Effectiveness of the contract

The Contractor/Bidder shall be effective within ….. days from the date of signature of the Contract by both parties

Number of GC Clause 8

Commencement of Contract:

The Contractor/Bidder shall provide Non-Consultancy Services from the effective date of contract.

Number of GC Clause 10.2

Expiration of Contract:

The time period shall be ……

Number of GC Clause 14

Termination

In the event of termination of the contract due to any reason as already defined in the General Conditions of Contract, the Bidder shall be responsible for providing to the Authority the Goods till the time of alternate arrangements.

Number of GC Clause 16

Conflict of Interest:

The Procuring Agency reserves the right to determine on a case-by-case basis whether the Bidder should be disqualified from providing goods or services due to a conflict of a nature described in Clause GCC 17.

Number of GC Clause 20

Liquidated Damages

If the Bidder fails to provide services as required under the contract or in case of any data loss/data breach or any incident compromising the data security or other such failures related to any services, the Bidder shall pay to the Procuring Agency as Liquidated Damages at a rate of **0.10%** to **10.00%** of the Contract value, in accordance with the extent of performance failure & the cost of investigating such incidents as judged by the Authority.

Number of GC Clause 21

Performance Guarantee:

The amount of performance guarantee shall be **10.00%** of the contract price in acceptable form of **Pay Order, Banker's Cheque, Call at Deposit, Bank Guarantee**

Number of GC Clause 27

Currency of Payment:

All the payment to be released to the contractor/Bidder shall be in Pakistani Rupees.

Number of GC Clause 28

Payment terms:

Payment will be made to the Bidder against the procured Goods and services according to the actual invoice or running bills submitted by the Bidder against the services provided within the time given in the conditions of the contract.

Number of GC Clause 29

Identifying Defects:

The Authority reserves the right at any time to inspect the premises of the provider to inspect the goods and monitor the goods being provided.

Inspections & Tests Requirements

For being Brand New, bearing relevant reference numbers of the equipment (Certificate from supplier)

For Physical Fitness having No Damages (Certificate from supplier)

For the Country of Origin as quoted by the Supplier (Certificate from manufacturer)

For conformance to specifications and performance parameters, through Prior to delivery inspection (Inspection Report by Procurement Committee / Inspection Team)

For successful operation at site after complete installation, testing and commissioning of the equipment (Installation, Testing and Commissioning Report by Procurement Committee / Inspection Team)

Delivery & Documents

Copies of the Supplier's invoice showing Goods' description, quantity, unit price, and total amount;

Original and two copies of the usual transport document (for example, a negotiable bill of lading, a non-negotiable sea waybill, an inland waterway document, an air waybill, a railway consignment note, a road consignment note, or a multimodal transport document) which the buyer may require to take the goods;

Copies of the packing list identifying contents of each package;

Insurance Certificate;

Manufacturer's or Supplier's Valid Warranty Certificate;

Inspection Certificate issued by the Nominated Inspection Agency (if any), and the Supplier's Factory Inspection Report;

Certificate of Origin.

The above documents would be required even if the equipment has already been imported and is available with the supplier ex-stock

Number of GC Clause 31

Following is the guidance for Dispute Resolution

i. If any dispute of any kind whatsoever shall arise between the Authority and the Bidder in connection with or arising out of the Contract... (full clause unchanged)

ii. At future of negotiation the dispute shall be resolved through mediation...

iii. At failure of mediation, arbitration under Arbitration Act 1940...

iv. Cost sharing equally...

v. Proceedings may commence before/after completion...

Notwithstanding any reference to the arbitration herein, the parties shall continue to perform their respective obligations under the Contract.

Rules of procedure for arbitration proceedings:

Any dispute between the Authority and a Bidder shall be referred to arbitration under the laws of Pakistan including Arbitration Act 1940.

Place of Arbitration and Award:

The arbitration shall be conducted in English language and place shall be Islamabad. The award shall be final and binding.

Bid Securing Declaration

Form 9: Bid Securing Declaration

Date: *[insert date (as day, month and year)]*

Bid No.:***P145845***

To: **Islamabad Club (Islamabad Club), Procurement Officer Islamabad Club Main Murree Road, Kashmir Road, Islamabad Capital Territory**

We, the undersigned, declare that:

We understand that, according to your conditions, Bids must be supported by a Bid Securing Declaration.

We accept that we will be blacklisted and henceforth cross debarred for participating in respective category of public procurement proceedings for a period of (not more than) six months, if fail to abide with a bid securing declaration, however without indulging in corrupt and fraudulent practices, if we are in breach of our obligation(s) under the Bid conditions, because we:

1. have withdrawn or modified our Bid during the period of Bid Validity specified in the Form of Bid;

2. Disagreement to arithmetical correction made to the Bid price; or

3. having been notified of the acceptance of our Bid by the Procuring Agency during the period of Bid Validity, (i) failure to sign the contract if required by Procuring Agency to do so or (ii) fail or refuse to furnish the Performance Security or to comply with any other condition precedent to signing the contract specified in the Bidding Documents.

We understand this Bid Securing Declaration shall expire if we are not the successful

Bidder, upon the earlier of (i) our receipt of your notification to us of the name of the successful Bidder; or (ii) twenty-eight (28) days after the expiration of our Bid.

Contract Form

SECTION IX: CONTRACT FORMS

THIS AGREEMENT made the _____ day of _____ 20_____ between **Islamabad Club (Islamabad Club), Procurement Officer Islamabad Club Main Murree Road, Kashmir Road, Islamabad Capital Territory**

(hereinafter called "the Procuring Agency") of the one part and *[name of Bidder]* of *[city and country of Bidder]* (hereinafter called "the Bidder") of the other part:

WHEREAS the Procuring Agency invited Bids for provision of goods, viz., **Supply, Installation, Testing and Commissioning of a New Passenger Elevator at the Club Masjid, Islamabad Club (*P145845*)** and has accepted a Bids by the Bidder for the provision of Goods in the sum of *[contract price in words and figures]* (hereinafter called "the Contract Price").

NOW THIS CONTRACT WITNESSETH AS FOLLOWS:

1. In this Contract words and expressions shall have the same meanings as are respectively assigned to them in the Conditions of Contract referred to.

2. The following documents shall be deemed to form and be read and construed as part of this Contract, In the event of any ambiguity or conflict between the Contract Documents listed below, the order of precedence shall be the order in which the Contract Documents are listed below:-

1. This form of Contract;
2. the Form of Bids and the Price Schedule submitted by the Bidder;
3. the Schedule of Requirements;
4. the Technical Specifications;
5. the Special Conditions of Contract;
6. the General Conditions of the Contract;
7. the Procuring Agency's Letter of Acceptance; and
8. [*add here: any other documents*]

3. In consideration of the payments to be made by the Procuring Agency to the Bidder as hereinafter mentioned, the Bidder hereby covenants with the Procuring Agency to provide the Goods related services and to remedy defects therein in conformity in all respects with the provisions of the Contract.

4. The Procuring Agency hereby covenants to pay the Bidder in consideration of the provision of Goods and the remedying of defects therein, the Contract Price or such other sum as may become payable under the provisions of the contract at the times and in the manner prescribed by the contract.

IN WITNESS whereof the parties hereto have caused this Contract to be executed in accordance with their respective laws the day and year first above written.

Signed, sealed, delivered by _____the _____ (for the Procuring Agency)

Witness to the signatures of the Procuring Agency:

……

Signed, sealed, delivered by _____the _____ (for the Procuring Agency)

Witness to the signatures of the Bidder: ……

PUBLIC PROCUREMENT REGULATORY AUTHORITY (PPRA) EPADS

Integrity Pact

Integrity Pact

DECLARATION OF FEES, COMMISSION AND BROKERAGE ETC. PAYABLE BYTHE SUPPLIERS OF GOODS, SERVICES & WORKS IN CONTRACTS WORTH RS.10.00 MILLION OR MORE

Contract Number: Contract Value: Contract Title:

Dated:

[Name of Supplier] hereby declares that it has not obtained or induced the procurement of any contract, right, interest, privilege or other obligation or benefit from Government of Pakistan or any administrative subdivision or agency thereof or any other entity owned or controlled by it (GoP) through any corrupt business practice.

Without limiting the generality of the foregoing [Name of Supplier] represents and warrants that it has fully declared the brokerage, commission, fee etc. paid or payable to anyone and not given or agreed to give and shall not give or agree to give to anyone within or outside Pakistan either directly or indirectly through any natural or juridical person, including its affiliate, agent, associate, broker, consultant, director, promoter, shareholder, sponsor or subsidiary, any commission, gratification, bribe, finder's fee or kickback, whether described as consultations fee or otherwise, with the object of obtaining or inducing the procurement of a contract, right, interest, privilege or other obligation or benefit in whatsoever form from GoP, except that which has been expressly declared pursuant hereto.

[Name of Supplier] certifies that it has made and will make full disclosure of all agreements and arrangements with all persons in respect of or related to the transaction with GoP and has not taken any action or will not take any action to circumvent the above declaration, representative or warranty.

[Name of Supplier] accepts full responsibility and strict liability for making and false declaration, not making full disclosure, misrepresenting fact or taking any action likely to defeat the purpose of this declaration, representation and warranty. It agrees that any contract, right interest, privilege or other obligation or benefit obtained or procured as aforesaid shall, without prejudice to any other right and remedies available to GoP under any law, contract or other instrument, be voidable at the option of GoP.

Notwithstanding any rights and remedies exercised by GoP in this regard, [Name of Supplier] agrees to indemnify GoP for any loss or damage incurred by it on account of its corrupt business practices and further pay compensation to GoP in an amount equivalent to ten time the sum of any commission, gratification, bribe, finder's fee or kickback given by [Name of Supplier] as aforesaid for the purpose of obtaining or inducing the procurement of any contract, right, interest, privilege or other obligation or benefit in whatsoever form from GoP.

Performance Guarantee Form

Performance Guarantee Form

To: **Islamabad Club (Islamabad Club), Procurement Officer Islamabad Club Main Murree Road, Kashmir Road, Islamabad Capital Territory**

WHEREAS *[name of Bidder]* (hereinafter called "the Bidder") has undertaken, in pursuance of Contract No. *[reference number of the contract]* dated *[insert date]* for provision of Goods*(*hereinafter called "the Contract").

AND WHEREAS it has been stipulated by you in the said Contract that the Bidder shall furnish you with a Bank Guarantee by a reputable bank for the sum specified therein as security for compliance with the Bidder's performance obligations in accordance with the Contract.

AND WHEREAS we have agreed to give the Bidders guarantee:

THEREFORE, WE hereby affirm that we are Guarantors and responsible to you, on behalf of the Bidder, up to a total of *[amount of the guarantee in words and figures],* and we undertake to pay you, upon your first written demand declaring the Bidder to be in default under the Contract and without cavil or argument, any sum or sums within the limits of *[amount of guarantee]* as aforesaid, without your needing to prove or to show grounds or reasons for your demand or the sum specified therein.

This guarantee is valid until the: *[insert date]*

Signature and seal of the Guarantors

_____

[name of bank or financial institution]

_____

[address]

[date}

PUBLIC PROCUREMENT REGULATORY AUTHORITY (PPRA) EPADS

Annexure

PUBLIC PROCUREMENT REGULATORY AUTHORITY (PPRA) EPADS

TECHNICAL DATA SHEET

Technical Submission (Vendor)

Document Required

See Form Under Additional Forms and Documents: **TECHNICAL DATA SHEET** (page number: 77)

PAYMENT STAGES

Information (Read-Only)

See Form Under Additional Forms and Documents: **PAYMENT STAGES** (page number: 81)

DRAWINGS

Information (Read-Only)

See Form Under Additional Forms and Documents: **DRAWINGS** (page number: 83)

BILL OF QUANTITIES

Financial Submission (Vendor)

Document Required

See Form Under Additional Forms and Documents: **BILL OF QUANTITIES** (page number: 86)

ANNEX C UNDERTAKING

Technical Submission (Vendor)

Document Required

See Form Under Additional Forms and Documents: **ANNEX C UNDERTAKING** (page number: 88)

Procurement Forms

PUBLIC PROCUREMENT REGULATORY AUTHORITY
(PPRA)
EPADS

PUBLIC PROCUREMENT REGULATORY AUTHORITY
(PPRA)
EPADS

Additional Forms and Documents

SUPPLY AND INSTALLATION OF PASSENGER ELEVATOR FOR CLUB MASJID.

- **TECHNICAL DATA SHEET**

Passenger Elevator Schedule Quantity: 01 No.

Applicable Code	EN 81
Country of Origin	China
Quantity	01 No's.
Elevators Use	Passenger Elevator
Capacity	630kg
Speed	1.0 m/s
Drive system	Gearless machine with 60% energy saving
Control System	Variable voltage variable frequency Control (VVVF)
Operation	Simplex Selective Collective
Floors	02
Stops in one line	G-1
Traveling	As per site
Door Operation	Variable voltage variable frequency Control (VVVF)
Door opening size	800 mm x 2100mm or as per design
Door opening	Two-Panel Center Opening **Glass Doors Double Door Drive**
Power Supply	380 volts .Ac 50 Hz. 3-phase
Hoist way Size	Width 6'3" x 5'0" Depth
Over head Required	4500mm
Pit Required	1500mm
Machine Room Height Required	MRL
Cabin Design	
Ceiling Type	As per standard
Cabin	Fabricated from imported sheet with international standard with imported emergency safety gear, rubber pads, pulleys and shoe **Glass Cabin**

Car door	Glass Hairline Stainless Steel
Wall	Glass Hairline Stainless Steel
Rear Wall	Glass Hairline Stainless Steel
Kick Plate	Hairline Stainless Steel
Lightning	As per standard
Blower Fan	For ventilation
Door sill	Extruded hard Aluminum
Car position indicators	LCD Display
Face plate	Hair line stain less steel
Handrails	Hairline Stainless Steel
Flooring	Standard tile
Counterweight frame	Fabricated on international standards with imported pulley and shoe
Entrance Design	
Landing Door	Glass Hairline Stainless Steel
Jamb	Hairline Stainless Steel
Sill	Extruded hard Aluminum
Signals	
Car operating panel	Micro Push Button in hairline Stainless steel face plate
Car Position Indicator	LCD Display
Ground floor	
Door jamb in Ground floor	Narrow jamb with Position indicator
Other Floors	Narrow jamb in other floor with Position indicator
Standard Features	
Car design	-It shall include alarm button, floor call button, door open/hold button, key-operated, attendant switch, fan switch and intercom. -ventilation blower -handrail on rear wall -load measuring device with overload buzzer and interlock till overload is removed -LED lighting
Car station	-attendant control -Emergency operation and fireman switch -Emergency lighting and alarm unit -voice guidance system
Special Features	Connected with building control -suitability for 50 Celsius ambient temperatures

	-phase reversal failure indication and interlock -direct leveling -optimum travel curve -rerunning automatically when elevator is repowered -car location adjusted automatically -load compensation -travel counter -over/under voltage -phase trip protection -over current protection -over heat protection -encoder trip protection -contact adhered protection -Bi-directional over speed protection -reversal protection -travel overtime protection -final terminal protection -overload protection -anti door-lock bridge -automatic bypass hall call while full load -level for self-helping -travel to next floor when open door trip -emergency alarm -automatic car fan -automatic car lighting -fire return feedback -settable landing number -automatic parking, parking floor -Car call cancellation -parking key switch, landing -fire return (phase 1), main landing
Safety Edge	Safety Edge witch reopens the door when obstructed by any object while closing
ERD	Emergency rescue device .In case of power failure, lift will automatically land to nearest floor.
Emergency Car light	In case of power failure it lights car automatically for 30 minutes
Interphone	yes
Alarm Buzzer	Emergency Alarm buzzer sound on in case of any emergency

Overload Features	To protect the overload of elevator this device sound a buzzer and the elevator remain stopped at that floor, when the number of passenger exceeds the rated capacity when excess number of passengers out of the car .the buzzer stops and the elevator door close.
Ventilation Fan	Car ventilation is smooth with ventilation fan built in the ceiling
Inspection / Maintenance	Maintenance button provided inside the car operation panel and also provided on the top of car
Light and fan buttons	Light and fan button provided inside the car operating panel
Lift movement	Up and down direction arrows provided on the car operating panel board pulse Modulation system to show the movement of the elevator
Door operating buttons	Sudden for Door Close /Open button are provided on the car operating panel
Door interlock Switch	When the door is opened the switch installed at the door operator is activated and keeps the car from moving during the operation of car it locks the door completely so as not to open the door from outside.
Speed Governor	It prevents traveling over speed making cabin emergency brake operate in case of any accident.
Safety gear	In case of any emergency or speed governor operate, it automatically hang/pause the elevator

Warranty: 01 Year.

Delivery Time:06 Weeks.

Installation Time:08 weeks.

(Total 14 weeks)

The Total Contract Price shall be paid as follows:

A) Payment to the Contractor against items in the BOQ shall be made as per the following manner:

a) **Ten percent (10%)** of the total Contract Price as non-recoverable advance shall be paid after (i) receipt of an acceptable Performance Security by the Employer in accordance with Sub-Clause 4.4; (ii) execution of Form of Contract Agreement by the Parties hereto; (iii) receipt of an acceptable bank guarantee by the Employer for the same amount and currency of the advance payment from a scheduled bank of Pakistan, in the prescribed form; and (iv) receipt of Contractor's invoice for advance payment by the Engineer.

Such advance Payment Guarantee shall be returned after the issuance of Taking over Certificate (TOC).

b) **Thirty percent (30%) of the total Contract Price** shall be paid after approval of technical submittals of Equipment by the Employer or Employer's Representative and upon submission of Letter of Credit (L/C) (in original) established by the Contractor for payment to the Manufacturer (if applicable) or proof of order placement. The charges for the establishment (i.e., opening and retirement) of L/C and subsequent charges for modifications and extension shall be borne by the Contractor.

c) **Twenty percent (20%) of the total Contract Price** shall be paid upon submission of the following documents:

1. Notice to deliver, issued by the Employer or Employer's Representative after pre-shipment inspection at Manufacturer's Premises (if applicable), up to his satisfaction.

2. Shipping/Transport Documents:

i. Payment/Commercial Invoice duly certified by the Employer or Employer's Representative;

ii. Delivery Challan or Transport Receipt;

iii. Certificate or Policy of Insurance covering transit insurance from Ex-works to the Project Site; and

iv. Packing List.

3. Certificate of Origin (in original), issued by the Manufacturer (if imported).

4. Inspection Certificate or Letter of Waiver, issued by the Employer or Employer's Representative.

d) **Ten percent (10%) of the total Contract Price** shall be paid upon arrival of all major equipment at site and upon issuance of Inspection Certificate by the Employer or Employer's Representative following inspection of the equipment up to his satisfaction.

e) **Twenty percent (20%) of the total Contract Price** shall be paid after Completion of Installation up to the satisfaction of the Employer or Employer's Representative and submission of invoice for the same amount duly certified by the Engineer or Engineer's Representative.

f) **Ten percent (10%) of the total Contract Price** shall be paid on completion of Testing and Commissioning of the Elevator up to the satisfaction of the Employer or Employer's Representative and after issuance of Taking Over Certificate (TOC) and submission of invoice for the same amount duly certified by the Employer or Employer's Representative.

[All above payments shall be made after deduction of all applicable taxes and retention money (5%).]{.underline}

All above payments shall be made after deduction of all applicable taxes which are deemed to be included in the Contract Value.

PUBLIC PROCUREMENT REGULATORY AUTHORITY (PPRA) EPADS

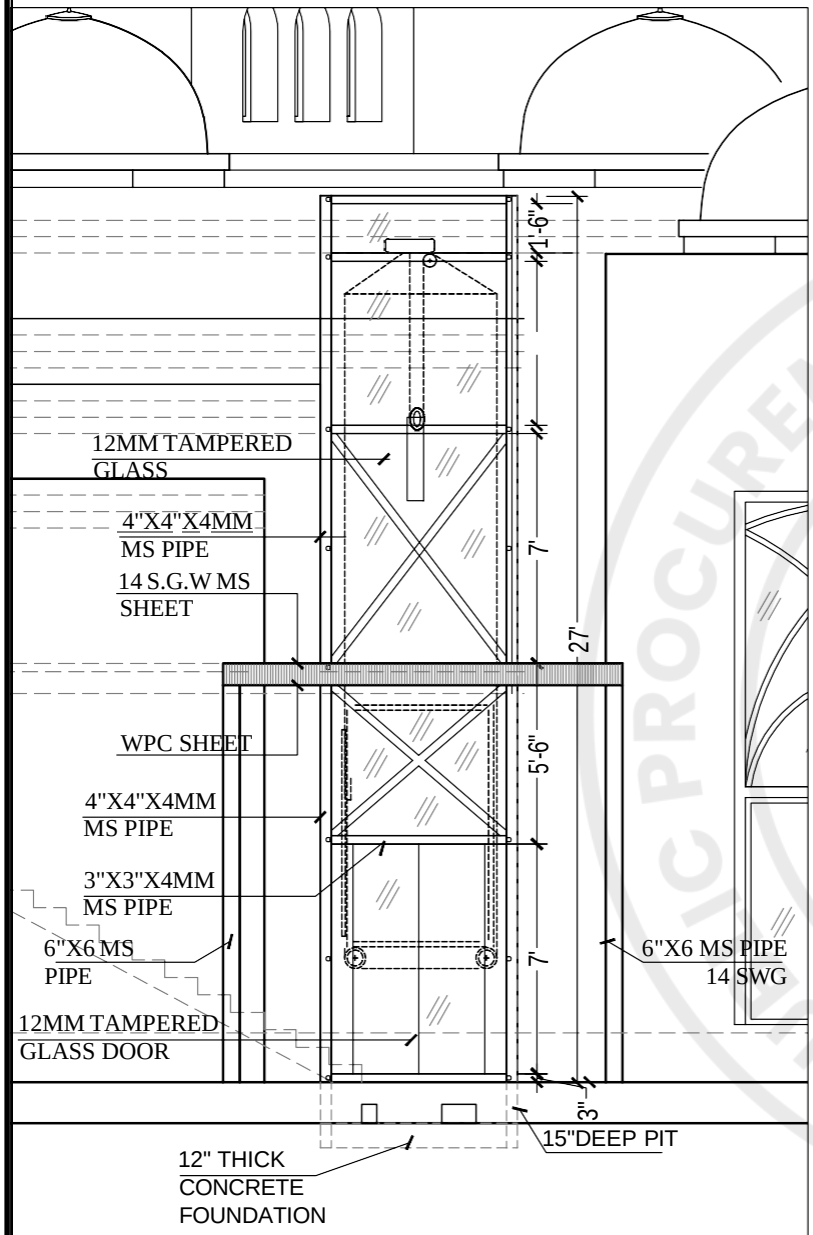

SOUTH PART ELEVATION

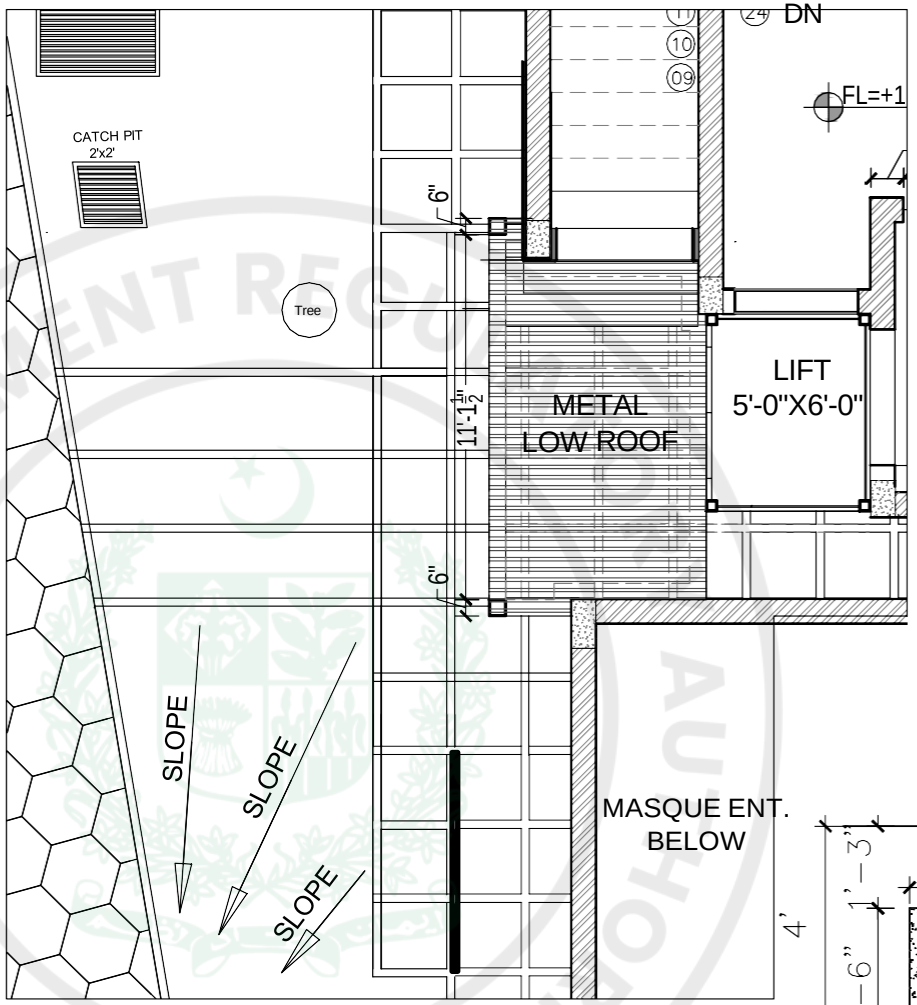

MEZZANINE FLOOR PLAN

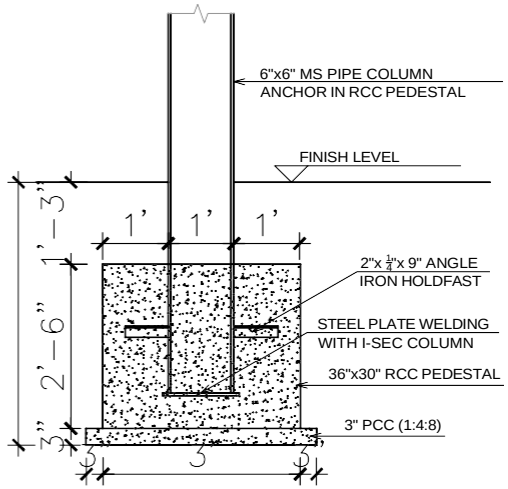

DETAIL OF RCC PEDESTAL

SCALE=1/2"=1'-0"

LIFT VERANDAH REFERANCE IMAGE

e-Pak Acquisition and Disposal System (EPADS) generated document | © 2026

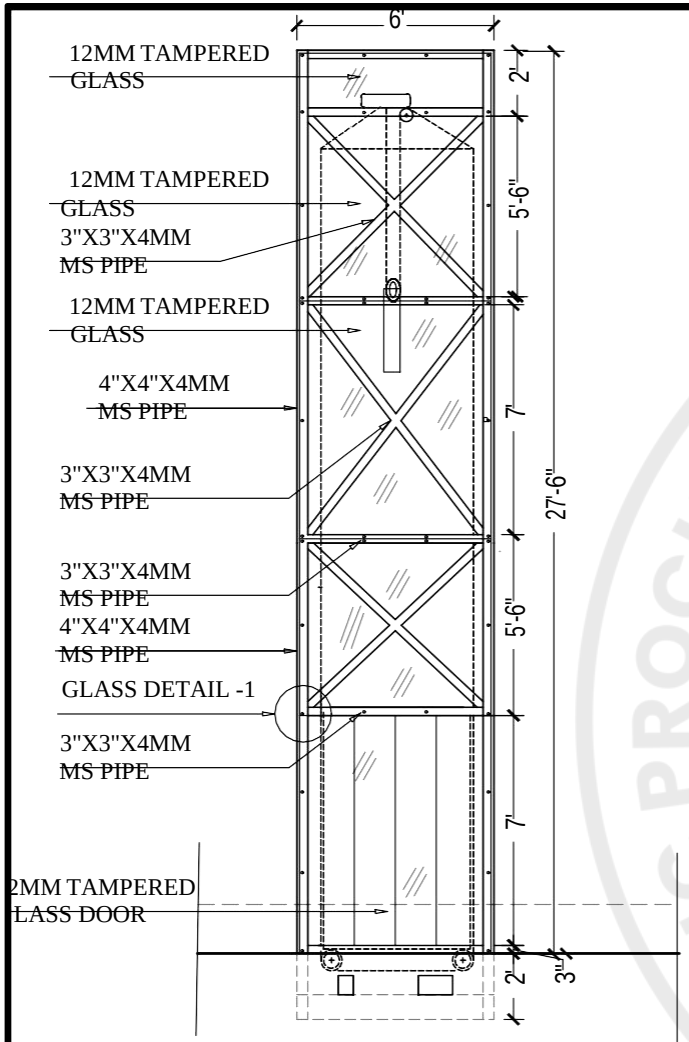

FRONT ELEVATION

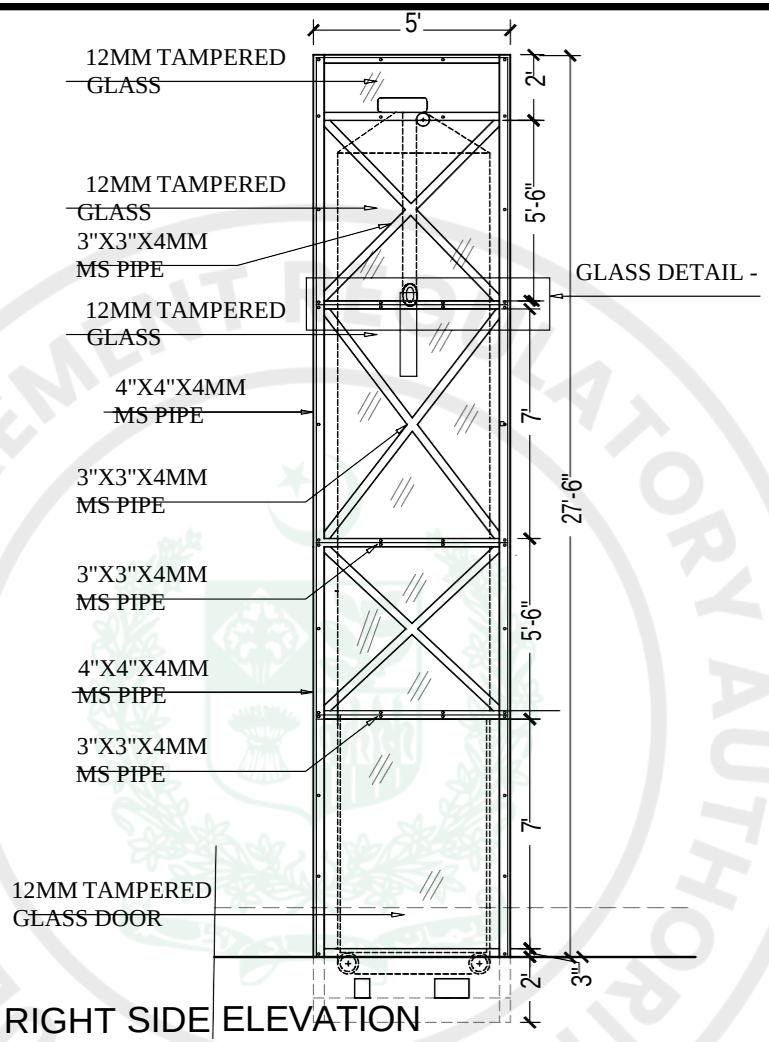

RIGHT SIDE ELEVATION

DETAIL-1
GLASS STUD

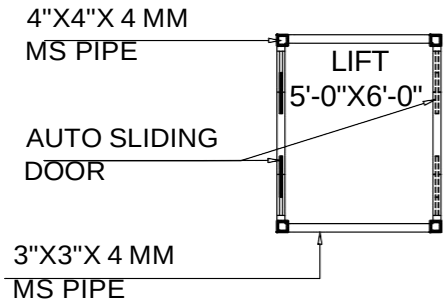

LIFT FRAMING PLAN
SCALE : $\frac{1}{2}$"=1'-0"

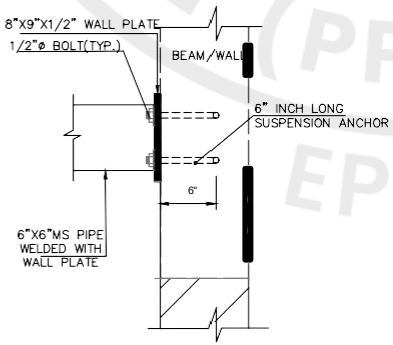

SECTIONAL ELEVATION
OF WALL PLATE CONNECTION

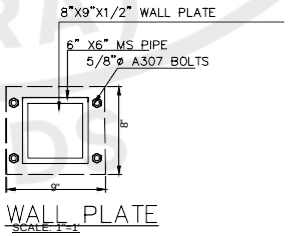

WALL PLATE
SCALE: 1"=1'

DETAIL-2

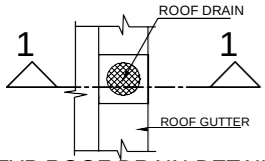

TYP.ROOF DRAIN DETAIL

SCALE: 3/4"=1'

REFERENCE IMAGE FOR GALSS FIXING

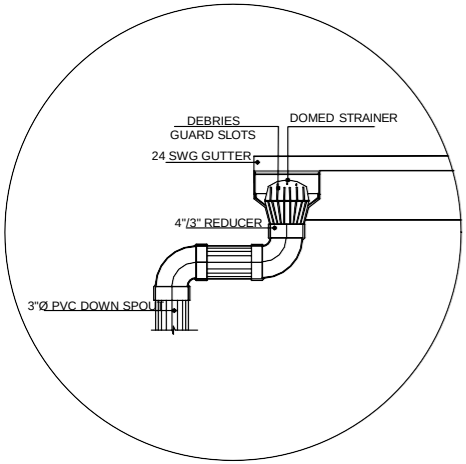

SECTION: 1-1

SCALE: 3/4"=1'

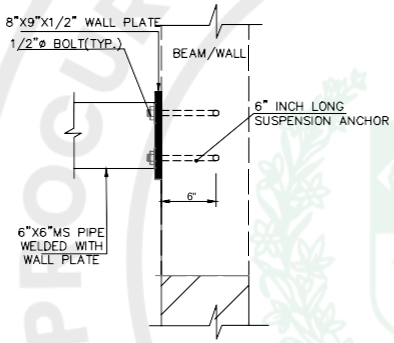

SECTIONAL ELEVATION OF WALL PLATE CONNECTION

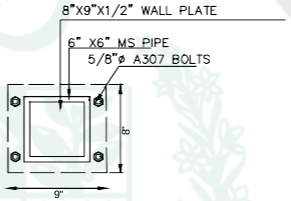

WALL PLATE

SCALE: 1"=1'

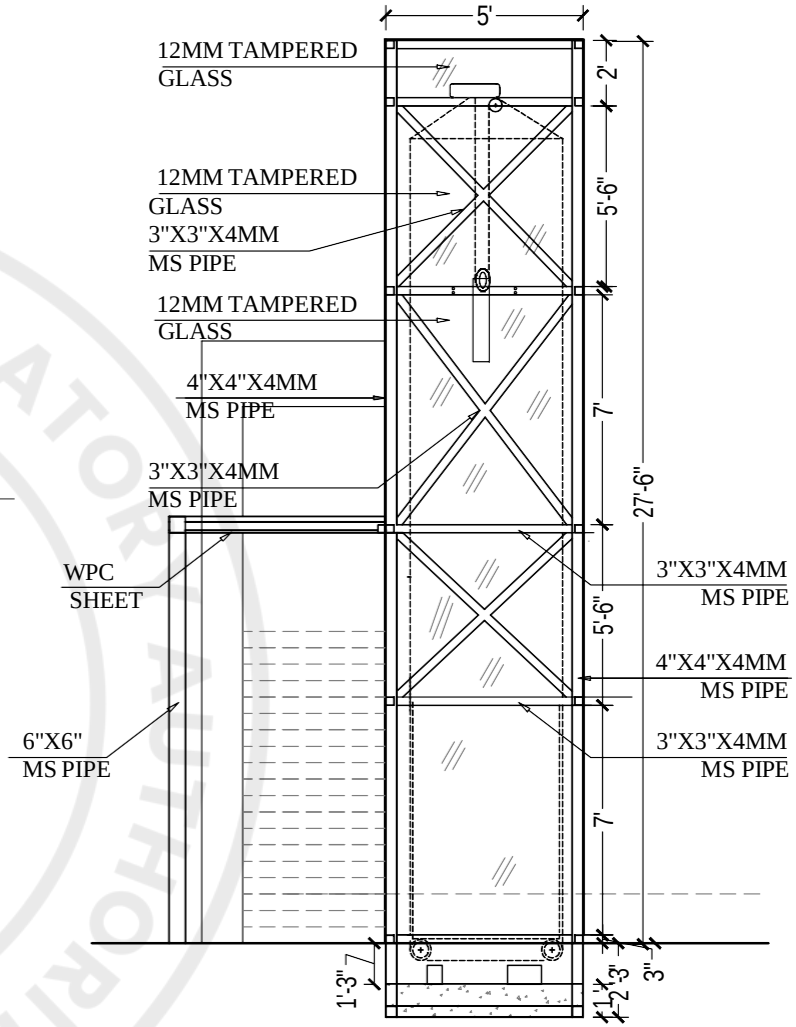

SECTION A-A

SCALE :$\frac{1}{2}$"=1'-0"

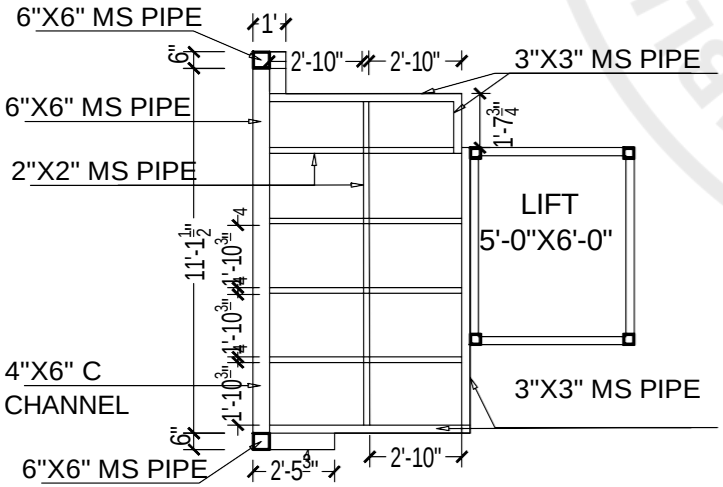

LIFT VERANDAH TOP FRAMING PLAN

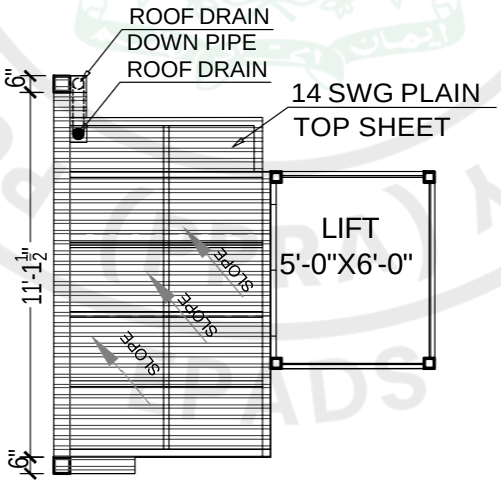

LIFT AND VERANDAH PLAN

Supply, Installation, Testing and Commissioning of a New Passenger Elevator at the Club Masjid, Islamabad Club, Islamabad.

[SCHEDULE OF PRICES / BOQ]

Item No.	Description	Unit	Qty.	Unit Rate PKR.	Total Amount PKR.
1.1	**Passenger Elevator (Supply, Installation, Testing & Commissioning), Design and Technical Specifications** Supply, Installation, testing, and commissioning of imported brand new passenger/service Elevator, Machine Room Less (MRL) - heavy duty fully complied and certified by EN 81 Standards, and for public use in buildings of minimum features including but not limited to VVVF high efficiency motor, complete stainless-steel finish, indoor type for ambient condition of 40 °C, having minimum capacity of 630 Kg/6 - 8 persons**,** speed 1.0 m/sec, 02 stops/02 openings**,** entrance as per design. Lift shall minimum include car, hoisting machinery, counter-weight, supports, brackets, automatic controls, embedded Parts, access ladder, separator screen & trap door, electric overload, shaft lightening, intercom system, emergency operation for cabin/door, emergency rescue device (ups/battery), safety devices, one (01) year defect liability period, complete in all respects as per specifications and according to EN 81 standard compliance. All taxes/duties shall be included. ***(Also refer to Technical data sheet)***	**LOT**	**1**		
1.2	**Steel Structure, Glass Cladding, and Elevator Housing Including design, fabrication, supply, and erection of structural steel frame, structural glazing, weatherproofing, waterproofing, drainage, expansion joints, sealants, and finishing accessories as per Technical Specifications & drawings;** Providing and installation of Elevator's steel structure • M.S Pipe having size of 100 x100 x 4mm thickness. • Brackets as per requirement. • Rawal bolts as per requirement.	**Job**	**1**		
1.3	Providing and installation of tempered glass cladding **Thickness: 12mm tempered Glass** as per Specifications & drawings;	**Job**	**1**		
1.4	Providing and installation of verandah structure including finishes as per drawings and Specifications	**Job**	**1**		
1.5	Civil work & Construction of underground RCC Pits & pedestals including - Finishing of the machine room floor and walls after completion of installation & all other civil work and core cutting related to building	**L.S**	**1**		

	construction, complete as per drawings and specifications				
1.6	Supply, laying and termination including thimbles etc of Pakistan Cables/Newage or equivalent 4 core 16 mm copper PVC/pve power cable with PVC conduit 1-1/2" with excavation, cutting of hard & soft soil complete as per specifications and / or directed by the Engineer.	**Meter**	**50**		
1.7	Supply, laying and termination including thimbles etc of Pakistan Cables/Newage or equivalent 6 mm green / yellow earth complete as per specifications and / or directed by the Engineer.	**Meter**	**50**		
1.8	Supply and Installation of MCB 32 Amp TP	**No's**	**2**		
	SALES TAX (Rs.)				
	TOTAL AMOUNT (Rs.)				

PUBLIC PROCUREMENT REGULATORY AUTHORITY (PPRA) EPADS

ANNEX C: UNDERTAKING

Tender No: _____

To,
The Procurement Manager,
Islamabad Club,
Murree Road, Islamabad.

We, ***[Full Name of Company]*** (hereinafter referred to as "the Bidder"), hereby undertake and declare as follows:

1. We have read and understood all terms and conditions of the bidding documents and undertake to comply fully with them.
2. We undertake to provide all necessary technical, financial, and logistical support to ensure timely and satisfactory completion of the project.
3. We certify that we have not been blacklisted or debarred by any government or regulatory authority.
4. We agree to abide by the Integrity Pact and refrain from any corrupt or fraudulent practices.
5. We understand that any misrepresentation may lead to disqualification, forfeiture of bid security, and legal action.
6. We commit to providing uninterrupted maintenance and support during the defect liability period as specified.

This undertaking is irrevocable and binding on us.

Signature: _____

Name: _____

Designation: _____

Company Stamp & Date: _____

PROCUREMENT REGULATORY AUTHORITY (PPRA) EPADS